Reduced Ship's crew-by Virtual Presence (RSVP)

FY99 Advanced Technology Demonstration (ATD) Final Report

Executive Summary

Program Overview

RSVP was a proof-of-concept and technology demonstrator, whose purpose was to provide Navy research and development risk mitigation for the DD21 program. The three year, 15 million dollar, BA 6.3 program was sponsored by the Office of Naval Research (ONR) Ship Hull, Mechanical, & Electrical Systems Science and Technology Division (Code 334). The high risk, high payoff ATD was significant to the Navy and DOD in demonstrating an intra-compartment, wireless shipboard sensor network. This will enable reduced manning, improve damage control, and lower total ownership cost for Navy ships. RSVP researched, developed, integrated and tested a functional system that incorporated many technologies of varying levels of maturity. All program demonstrations were completely successful, including a VIP tour and demonstration of the RSVP system aboard CG-61 on May 24, 2001 in Annapolis, MD.

RSVP achieved its final exit criteria by completing three full-scale demonstrations: verification and validation (V&V) at the NSWCCD-SSES DDG-51 Land Based Engineering Test Site (LBES); an At-Sea trial for 90 days aboard USS MONTEREY (CG-61); and a Damage Control and Firefighting exercise aboard the Ex-USS SHADWELL (LSD-15), in coordination with the Damage Control-Automation for Reduced Manning (DC-ARM) program. The RSVP ATD program came to a successful conclusion on September 26, 2001, upon the completion of the final demonstration aboard ex-USS SHADWELL.

Please visit http://rsvp.rk.anteon.com/home.htm for complete program documentation.

System Overview

The RSVP program pursued three major areas of high-risk technology application development: Advanced sensors in a high-density configuration; large scale wireless shipboard intracompartment networks; and data fusion in support of shipwide situational awareness. The RSVP program implemented four major functional areas for monitoring: Environment, Structure, Machinery, and Personnel. The primary components of the RSVP system consist of :

1. Autonomous Sensor Clusters
These units monitor the environmental and structural functional areas. The cluster is composed of three parts; a sensor board populated with Commercial Off The Shelf (COTS) and Micro-Electro-Mechanical Systems (MEMS) sensors and associated electronics, a Power Management Module (PMM), and a radio board. The PMM regulates and stores power from various power harvesting devices, and directs power from the harvesting sources or a battery backup. The Sensor Cluster wirelessly transmits data to Access Points within a compartment.

2. Access Points (APs)
Access Points receive data from the wireless sensing components and process that data to provide compartment state. An AP is an industrial grade IBM-clone PC running the Embedded Windows NT operating system. They operate off of ship's power. These units were mounted in a shipboard compartment to receive and process data wirelessly from RSVP system components, perform data logging and maintain a video loop recorder. Access Points within a particular space exchange data with each other so each can make compartment level condition assessments.

3. Personnel Status Monitors (PSM)
This device is a consists of two parts: A Communication Interface Unit (CIU) and an Integrated Sensor Unit (ISU). The CIU is a pager-like device that wirelessly communicates to the APs. It provides sailor ID and an RF signal source that can be used by the APs to determine location. The ISU is a bio-sensor belt that transmits physiological data to the CIU.

4. Machinery Health Monitoring System (HMS)
A wireless HMS system was implemented on a Allison K17 Ship Service Gas Turbine Generator (SSGTG).. The HMS employs hardware and software in a multi-layer, distributed, hierarchical architecture, that monitored portions of one SSGTG. The hardware and software elements included sensors, data acquisition, signal conditioning, data analysis, archival/retrieval, and control, and two-way RF communication. The Intelligent Component Health Monitor (ICHM) provided component/subsystem level monitoring while the System Health Monitor (SHM) combined ICHM information into a higher level system view. Communication with the SHM, ICHM and AP was accomplished via two independent wireless RF links.

5. Watchstation and Operator Interface
The Watchstation is the means for receiving alarm notification and for interactive viewing selected system data. RSVP had its own Watchstation, but in an operational system the Watchstation functions would be performed at the ship's general-purpose operator consoles. The Watchstation is a commercially available Pentium based computer running Windows NT, in a ruggedized rack mount housing.

General Results and Conclusions

The ATD demonstrated the applicability and effectiveness of a high density, multifunctional, wireless monitoring system for Navy ships. The RSVP program team believes this is an effective *architecture* for the next generation Naval warships to achieve minimal manning levels. The specific components used in RSVP will be replaced by future, improved, COTS components available during ship design and construction.

The technologies applied by RSVP were of varying levels of maturity. The available MEMS sensors were effective, as well as low power. However, not all required sensors were available in MEMS or were low power. Development of other low power sensing devices, specifically chemical sensors, needs to continue. The power harvesting technologies were the most immature components of RSVP, and were not able to provide enough power to independently sustain a senor cluster. RSVP achieved power autonomy through use of installed batteries. However, the technologies look promising enough that they will achieve the required power levels in the near future. The electronic and processing components will also achieve lower required power levels, helping to achieve this goal.

The use of RF in the 2.4 GHz Industrial Scientific and Medical (ISM) band proved effective, especially in a ship's engine room. There was also very little interference in this band during laboratory fire testing as well. It is anticipated, however, that more devices will be brought aboard as new technology is introduced, and the spectrum will become increasingly crowded. Spectrum management aboard ship will become a necessity.

The ability to collect and process machinery data in a distributed, wireless hierarchical architecture was successfully demonstrated. Implementation of the Condition-Based Maintenance (CBM) approach and technology demonstrated in RSVP will support manning and total ownership cost reduction goals. However, to make truly accurate condition assessments, predict remaining useful life and make operational decisions based on this information, more development and validation is required in the field of diagnostic and prognostic software algorithms.

True personnel monitoring can only be achieved through a total ship-wide monitoring system. RSVP was implemented in the engine room of CG-61 and in selected compartments of ex-SHADWELL. When the PSM was within detection range of a receiver, it was able to track a sailor. Both the PSM and Sensor Clusters will benefit from improved, long life battery technologies as well.

Much more development in data fusion and advanced reasoning algorithms is required beyond RSVP to accurately provide situational awareness in a minimally manned shipboard environment. The volume of data that a complete RSVP system would provide needs to be processed to a level to that a remote watchstander can have accurate, timely assessment, and can take appropriate action. The RSVP architecture allows these algorithms to be inserted as they become available. Development and demonstration of the RSVP prototype system confirmed the critical need for Human Factors analysis in design of shipboard remote automation systems.

Primary Author Contact Information

Mr. Anthony J. Seman III
NSWCCD-SSES Code 9113
(215) 897-1086
semanaj@nswccd.navy.mil

Mr. Kevin Toomey
Charles Stark Draper Laboratory
(617) 258-2965
ktoomey@draper.com

Mr. Scott Lang
Penn State Applied Research Laboratory
(814) 863-5842
swl1@psu.edu

Acknowledgements

RSVP would like to acknowledge the many contributors to this report.

Mr. Gary Schwartz, The Charles Stark Draper Laboratory, Cambridge, MA.

Dr. Karl Reichard, The Penn State Applied Research Laboratory, State College, Pa.

Mr. Bohdan Dunas, Naval Surface Warfare Center, Carderock Division, Ship Systems Engineering Station (NSWCCD-SSES), Philadelphia, PA.

Mr. Micheal Donnelly, Naval Surface Warfare Center, Carderock Division, Ship Systems Engineering Station (NSWCCD-SSES), Philadelphia, PA.

Mr. Cyrus Smith, Oak Ridge National Laboratory (ORNL), Oak Ridge, TN.

Mr. Alan Wintenberg, Oak Ridge National Laboratory (ORNL), Oak Ridge, TN.

Mr. John C. Bass, Mr. Saeid Ghamaty, and Mr. Charles C. Morris, Hi-Z Technology, San Diego, CA.

Mr. Menachem Rafaelof, MJR Scientific, Superior, Co.

Mr. Roger Moulder, James Gregory Associates, Columbus, OH.

Table Of Contents

1.0 Overview 1

1.1 Introduction 1

1.2 Approach 1

1.3 High Risk Technical Areas 2

1.4 Problem Statement 2

1.5 Current Architecture 2

1.6 Execution 3

1.7 Exit Criteria 4
1.7.1 FY99 4
1.7.2 FY00 4
1.7.3 FY01 4

1.8 RSVP Integrated Product Team (IPT) 5

2.0 Top Level Requirements 7

2.1 Office of Naval Research (ONR) 7

2.2 Integrated Product Process Development (IPPD) 7

2.3 Functional and Performance Requirements Overview 8
2.3.1 System Functional Requirements 8
2.3.2 Performance Requirements 8
2.3.3 IPPD Requirements Specification 10

2.4 Manning Functional Analysis (MFAS) 13
2.4.1 MFAS Information Requirements 13
2.4.2 DD21 Top Level Scenario Summary 14
2.4.3 RSVP Applicable Scenario Engagement Events 14
2.4.4 RSVP Demonstration Scenarios 14

3.0 Systems Engineering 15

3.1 System Design Constraints 15
3.1.1 Capability 15
3.1.2 Cost 15
3.1.3 Reliability 15
3.1.4 Survivability 15

3.2 Models 16
3.2.1 Cost Model 16
3.2.2 Availability 17

3.3 Requirements Implementation *19*

3.4 Risk Mitigation *23*
3.4.1 RF Testing 23
3.4.1.1 RF Radiated/Susceptibility Tests 23
3.4.1.2 Breadboard Radio Testing 24
3.4.1.3 RF/Fire Testing 25
3.4.1.4 Demonstrate Ultra-Low Power Processing Electronics 26
3.4.2 Data/Information Fusion 28
3.4.2.1 Information Architecture 28
3.4.2.2 Data Fusion 29
3.4.3 Power Harvesting 30
3.4.3.1 Light Energy Survey 30
3.4.3.2 Vibration Energy Survey 31

4.0 Architecture 32

4.1 Environmental and Structural Sensor Cluster *32*
4.1.1 Overview 32
4.1.2 RSVP Hardware 33
4.1.2.1 Microcontroller 33
4.1.3 Operational Characteristics 38
4.1.3.1 Monitor Mode (Unlocked) Versus Acquisition Mode (Locked) 38
4.1.3.2 Acquisition Mode Network Management 39
4.1.3.3 Sensor Data Processing 40
4.1.4 Sensor Performance 42
4.1.4.1 Power Considerations 43
4.1.5 Firmware Modules 45
4.1.6 Environmental Cluster Configuration Monitor 49
4.1.6.1 Uncalibrated Dump of A/D buffer with Ctrl “S” Command 50
4.1.6.2 Environmental Cluster Standard Data Message 51
4.1.6.3 Environmental Cluster Sound Event Message 52
4.1.6.4 Environmental Cluster Diagnostic Message 53
4.1.6.5 Environmental Cluster EEPROM Calibration Data 54
4.1.7 Environmental Cluster Sensor Calibration 60
4.1.8 Structural Cluster Configuration Monitor 63
4.1.8.1 Structural Cluster Shock Event Message 65
4.1.8.2 Structural Cluster EEPROM Calibration Data 65
4.1.9 Power Management Module (PMM) 70
4.1.9.1 Requirements and Goals 70
4.1.9.2 Power Module Description 71
4.1.9.3 Photovoltaic Module, Blocking Diode & Charge-Storage Capacitor 73
4.1.9.4 Alternate power sources 77
4.1.9.5 Source input requirements 77
4.1.9.6 Primary Battery 78
4.1.9.7 Oscillator 78
4.1.9.8 Power Module ASIC 78

4.1.9.9 DC-DC Converter 79
4.1.9.10 Main Energy Storage Capacitor 82
4.1.9.11 Power Source Switch 82
4.1.9.12 Voltage reference 83
4.1.9.13 Voltage level monitors 83
4.1.10 Control logic for the power module 84
4.1.11 Linear Regulator 87
4.1.11.1 Step-up regulator 88
4.1.11.2 Power Module startup and shutdown 88
4.1.11.3 Power Module and Sensor Cluster Processor Interface 89
4.1.11.4 Results 90
4.1.12 Structural Sensors 95
4.1.13 Power Harvesting 99
4.1.13.1 Vibration-to-Electric 99
4.1.13.2 Thermo-to-Electric 104

4.2 Machinery Health Monitoring System 106
4.2.1 Overview 106
4.2.1.1 System Health Monitor (SHM) 107
4.2.1.2 Intelligent Component Health Monitor (ICHM) 107
4.2.2 Hardware and Software Requirements 108
4.2.2.1 ICHM Functionality and Capability 110
4.2.2.2 SHM Functionality and Capability 112
4.2.2.3 HMS Architecture 113
4.2.3 Hardware 114
4.2.3.1 Overview 114
4.2.3.2 Sensors 115
4.2.3.3 ICHM 120
4.2.3.4 SHM 122
4.2.4 Software 122
4.2.4.1 Overview 122
4.2.4.2 Communication Interface 123
4.2.4.3 ICHM 133
4.2.4.4 SHM 134
4.2.5 Operational Characteristics 137
4.2.5.1 Machinery Virtual Presence 137
4.2.5.2 Information Processing and Flow 142
4.2.5.3 Data Processing and Analysis 153

4.3 Personnel Status Monitoring System 161
4.3.1 ISU (Chest belt) 161
4.3.2 CIU (Waist belt unit) 162

4.4 Access Point 164
4.4.1 Hardware 164
4.4.2 Software System and Development 165
4.4.2.1 Publish/Subscribe Paradigm 165
4.4.2.2 Programming Language and Development 166

4.4.2.3 Audio, Video and Video Compression 167
4.4.2.4 Communication Between the Primary AP and the Watch Station 167
4.4.2.5 Alarm Generation 168
4.4.2.6 RF Architecture 168

4.5 Watchstation 169
4.5.1 Overview 169
4.5.1.1 Functional Requirements 170
4.5.2 Hardware 173
4.5.2.1 Hardware Requirements 173
4.5.2.2 Watchstation Installation – CG61 USS MONTEREY 176
4.5.3 Software 177
4.5.3.1 Overview 177
4.5.3.2 Sammi 178
4.5.3.3 NDDS 179
4.5.3.4 Sammi/NDDS Interface (SNI) 179
4.5.4 User Interface Design 182
4.5.4.1 Approach 182
4.5.4.2 Virtual Presence/ Situational Awareness 182
4.5.4.3 UI Functional Requirements 184
4.5.4.4 UI Development 185
4.5.4.5 UI Design Specification 187
4.5.4.6 RSVP User Interface 192

5.0 Demonstrations 211

5.1 LBES 211
5.1.1 Primary Goals: 211
5.1.2 Approach: 211
5.1.3 Equipment 212
5.1.4 Normal Operation Tests 212
5.1.4.1 Environmental Sensor Cluster (ESC) 212
5.1.4.2 Machinery HMS (ICHM and SHM) 213
5.1.4.3 Radio Bit Error Rate (BER) Testing 215
5.1.4.4 APs 215
5.1.4.5 Algorithms 215
5.1.5 Fault (loss of communications) Recovery Exercises 229
5.1.5.1 APs 230
5.1.5.2 Sensor Clusters 230

5.2 At-Sea Demonstration 232
5.2.1 Introduction 232
5.2.2 Equipment Locations 232
5.2.3 Test Results 235
5.2.3.1 Environmental Sensor Clusters 236
5.2.3.2 Structural Sensor Clusters 239
5.2.3.3 Machinery Monitoring 243
5.2.3.4 Personnel Monitoring 271

5.2.3.5 Personnel Tracking 273
5.2.3.6 Power Harvesting 276

5.3 Ex-USS Shadwell 279
5.3.1 Introduction 279
5.3.2 Equipment Locations 280
5.3.3 Peacetime Scenarios 282
5.3.4 Wartime Scenarios 290
5.3.4.1 Personnel – Physiological Status 293
5.3.4.2 Personnel – Location Determination 295
5.3.4.3 Flood Detection 298

6.0 Additional Results 299

6.1 Manning Analysis 299
6.1.1 Manning Reductions 299
6.1.1.1 Usability Testing 301

6.2 Value Analysis using the Process Analysis Toolkit for Affordability (PATA) – IPPD Analysis 302
6.2.1 Introduction 302
6.2.2 Scope 302
6.2.3 Objectives 302
6.2.4 Approach 303
6.2.4.1 Requirements Determination 303
6.2.4.2 Desirability Functions 304
6.2.4.3 Demonstration and Data Collection 305
6.2.4.4 Value Analysis 305
6.2.4.5 Technology Worksheets 307
6.2.4.6 Cost Worksheet 307
6.2.4.7 Environmental Monitoring (PerfEnv) Worksheet 308
6.2.4.8 Machinery Monitoring (PerfMach) Worksheet 310
6.2.4.9 Personnel Monitoring (PerfPer) Worksheet 311
6.2.4.10 Structural Monitoring (PerfStruct) Worksheet 312
6.2.4.11 System-Level Monitoring (PerfSys)Worksheet 313
6.2.4.12 Power Harvesting Worksheet 314
6.2.5 Value Scorecard 315
6.2.6 Summary 317

7.0 Recommendations 318

7.1 Technology 318
7.1.1 Wireless 318
7.1.2 Sensors 318
7.1.2.1 MEMS Spectrometer for Infrared Gas Analysis 318
7.1.3 Power Harvesting 319

7.2 MEMS-Based Power Generation 320
7.2.1.1 Microturbomachinery 320

7.2.1.2 Thermoelectrics 320
7.2.1.3 Vibration to Electric Generators 321
7.2.1.4 RSVP Power Scavenging Efforts 321

8.0 References 322

Figures

Figure 1 RSVP Radio Breadboard 24
Figure 2 Frequency-Averaged Attenuation for Directional Antennas 25
Figure 3 Frequency-Averaged Attenuation for Patch Antennas 26
Figure 4 Breadboard Environmental Sensor Cluster 27
Figure 5 Information Infrastructure 28
Figure 6 RSVP Data Fusion 29
Figure 7 Average Vibration Levels in MER#1 aboard CG-61 31
Figure 8 Average Temperatures in MER#1 aboard CG-61 31
Figure 9 Environmental/Structural Cluster Final Implementation 32
Figure 10 Power Module Block Diagram 72
Figure 11 Detailed Diagram Of Power Module 73
Figure 12 Prototype Photovoltaic Module 74
Figure 13 Prototype Photovoltaic Module I-V Characteristic. 75
Figure 14 PV Clamp Diagram 76
Figure 15 PV Limiter Clamping Behavior. 76
Figure 16 PMM Input Model Seen By Power Source. 77
Figure 17 Power Module ASIC Layout. 80
Figure 18 DC-DC Converter 81
Figure 19 Voltage Reference For Power Management ASIC 83
Figure 20 Power module ASIC timing diagram with control signals. 86
Figure 21 Simplified schematic of linear regulator. 87
Figure 22 Linear regulator input/output characteristics. 88
Figure 23 First generation power management module 90
Figure 24 Second generation power management module 91
Figure 25 Third generation power management module front view 92
Figure 26 Third generation power management module rear view 92
Figure 27 Close-up of the power management module ASIC 93
Figure 28 Load test board and battery box 94
Figure 29 Power management module and load test board 94
Figure 30 IC Sensors Model 3140 Accelerometers 95
Figure 31 Sarcos Research Corporation Uni-Axial Strain Transducer (UAST) schematic and installation 95
Figure 32 RSVP Structural Cluster (including sensors) installed onboard USS MONTEREY (CG-61) 96
Figure 33 Constant Strain Apparatus 97
Figure 34 Seaway Motion/Force Simulation Device 97
Figure 35 Energy Harvesting Source 99
Figure 36 A Simple Connection Of Coils In Series And A Diode Bridge For Voltage Conversion 101
Figure 37 Transducer Construction With A Moving Coil As A Seismic Mass 102
Figure 38 Transducer Construction With A Moving Magnet As A Seismic Mass. 103
Figure 39 40 mW Thermoelectric Module 104
Figure 40 RSVP Thermoelectric Energy Harvesting Generator Installed on CG61 USS MONTEREY 105

Figure 41 Machinery Health Monitoring System 106
Figure 42 Functional Components of SHM and ICHM 109
Figure 43 ICHM Block Diagram 111
Figure 44 SHM block diagram 112
Figure 45 HMS Hardware Installation Locations 115
Figure 46 HMS SSGTG Sensor Location 115
Figure 47 ICHM Hardware 120
Figure 48 Filter Board 121
Figure 49 Connector Board 121
Figure 50 SmallPC - SHM 122
Figure 51 Interface Flow Diagram 129
Figure 52 Interface Timing 132
Figure 53 Example ICHM Script File 136
Figure 54 Engine and Accessory Gearbox Operational Information 138
Figure 55 SSGTG Electrical Power Generation Performance Information 139
Figure 56 Examples of Alert, Alarm and System Health Information 140
Figure 57 Maintenance Information Access Capability 142
Figure 58 Information Processing and Flow From Sensor to WS 143
Figure 59 Generator Electrical Feature Extraction and Operational Data Processing 144
Figure 60 Generator Electrical Fault Processing 145
Figure 61 Bearing Vibration Feature Extraction 146
Figure 62 Bearing Fault Processing 147
Figure 63 Extraction of Gear and Shaft Vibration Features 150
Figure 64 Gear and Shaft Fault Processing 151
Figure 65 RBG Processing Flow 152
Figure 66 AGB Processing Flow 153
Figure 67 Inputs and Output of the CBM Toolbox 154
Figure 68 Traditional Processing Flow for CBM Feature Extraction Methods 157
Figure 69 Simple Envelope Detector Scheme 159
Figure 70 RSVP Personnel Status Monitoring Belt 161
Figure 71 RSVP RF-Communication Interface Unit 162
Figure 72 Access Point Hardware 164
Figure 73 Watchstation Screens 176
Figure 74 Watchstation CPU Mounted in ICAS Rack 176
Figure 75 RSVP System Architecture 178
Figure 76 Sammi Structure 179
Figure 77 Generalized Sammi/NDDS/Database Message Interaction 180
Figure 78 Interface Data Flow 181
Figure 79 User Interface Framework 188
Figure 80 Condition and Alarm Indicators 192
Figure 81 Broadside Tool 193
Figure 82 Deck Plate Tool 194
Figure 83 Compartment Tool 195
Figure 84 Layer Tool 196
Figure 85 General Arrangement of Task Screen 198

Figure 86 Event Table 198
Figure 87 Event Screen..... 199
Figure 88 Hull Stress Overview Page 200
Figure 89 Machinery Subsystem Overview Page..... 201
Figure 90 SSGTG Overview Page 202
Figure 91 SSGTG Details Page 203
Figure 92 SSGTG Select Trend Pull Down Menu 204
Figure 93 SSGTG Trend Data Page 204
Figure 94 Environmental Overview Page 205
Figure 95 Environmental Detail Page 206
Figure 96 Crew Overview Page 207
Figure 97 Crew Detail Page..... 208
Figure 98 System Components in Compartment 209
Figure 99 System Details Page 210
Figure 100 ICHM and SHM Test Software/Laptop..... 220
Figure 101 SHM Connections Display 221
Figure 102 ICHM Message Header Watcher..... 222
Figure 103 ICHM Parameter Structure Display 223
Figure 104 ICHM Fault Data Structure Display 223
Figure 105 ICHM Info Display 224
Figure 106 ICHM Debug Display 224
Figure 107 1st Deck of MER#2..... 232
Figure 108 2nd Deck of MER#2 233
Figure 109 3rd Deck of MER#2..... 233
Figure 110 4th Deck of MER#2 234
Figure 111 Typical RSVP Installed Equipment Suite 234
Figure 112 Typical RSVP HMS Installation 235
Figure 113 Flood Detection Scripted Scenario 236
Figure 114 Watchstation Navigation Screen – Fire Scenario 237
Figure 115 Watchstation Information Screen – Fire Scenario 237
Figure 116 Fire Detection Scripted Scenario..... 238
Figure 117 Structural Cluster..... 239
Figure 118 The Structural Sensor Cluster Sensor Suite Mounting Scheme 239
Figure 119 At-Sea Shock Data 240
Figure 120 Sarcos UAST Strain Sensor 241
Figure 121 At-Sea Test Data For Peak Strain Measurements 242
Figure 122 Relative values of hull strain measure by the UAST device 242
Figure 123 HMS Hardware Arrangement 243
Figure 124 Generator Electrical and Mechanical ICHM Installation Locations ... 244
Figure 125 Generator Electrical Sensors - ICHM #1 244
Figure 126 Generator Mechanical Sensors – ICHM #2 245
Figure 127 Reduction Gear Box ICHM Installation Location 245
Figure 128 Reduction Gear Box Sensors – ICHM #3..... 246
Figure 129 Accessory Gear Box ICHM Installation Location..... 246
Figure 130 Accessory Gear Box Sensors - ICHM #4 247
Figure 131 Engine Module Temperature – ICHM #4 247

Figure 132 Fault Simulation Approach 253
Figure 133 Comparison of Background Noise In-Port and Underway - *SSGTG Off* 270
Figure 134 Comparison of Generator Vibration Underway and at LBES-*SSGTG On* 270
Figure 135 Comparison of RGB Spectra Underway and at LBES - *SSGTG On* 271
Figure 136 PSM Error Code Generation 272
Figure 137 PSM Yellow Indication 272
Figure 138 PSM Red Indication 273
Figure 139 Location Determination Within MER#2 274
Figure 140 Bit Error Rate (BER) 275
Figure 141 Sensor Cluster with PMM and Diagnostic Board 276
Figure 142 Thermo-Electric Harvesting Generator and Photovoltaic Array 276
Figure 143 Main deck RSVP equipment locations 280
Figure 144 2nd Deck RSVP Equipment Locations 281
Figure 145 3rd Deck RSVP Equipment Locations 281
Figure 146 Computer Monitoring Fire Test Setup 282
Figure 147 Sensor Cluster #140 Fire Detection Indexes 283
Figure 148 Diesel Engine Exhaust Test Setup 284
Figure 149 Sensor Cluster #172 Fire Detection Indexes 285
Figure 150 Smoldering Electrical Cable Test Setup 285
Figure 151 Sensor Cluster #178 Fire Detection Indexes 286
Figure 152 Bedding Fire Test Setup 287
Figure 153 Sensor cluster #140 fire detection indexes 287
Figure 154 Grinding Test Setup 288
Figure 155 Sensor Cluster #169 Fire Detection Indexes 289
Figure 156 Tomahawk Equipment Room Layout 290
Figure 157 Compartment-Level Messages Being Sent To The RSVP Watchstation 291
Figure 158 Sensor Cluster S/N #176 Fire Detection Indexes 292
Figure 159 Fire Evolution Illustration 292
Figure 160 PSM's physiological Status Algorithm 293
Figure 161 PSM Red Alarm 294
Figure 162 PSM Yellow Alert 294
Figure 163 Results Of Sailor Tracking On The Main Deck 295
Figure 164 Results Of Sailor Tracking On The 2nd Deck 296
Figure 165 Graphic of sailor tracking on the 2nd Deck 297
Figure 166 Results Of Sailor Tracking On The 3rd Deck 297
Figure 167 Sensor Cluster #156 Flooding Data 298
Figure 168 Roving Monitor Parameters 300
Figure 169 S&T IPPD Process 303
Figure 170 Sample RSVP Desirability Curve 304
Figure 171 RSVP Requirement Types and Weights 306
Figure 172 Cost Worksheet 308
Figure 173 Environmental Monitoring Worksheet 309
Figure 174 Fire Detection Desirability Curve 309

Figure 175 Machinery Monitoring Worksheet 310
Figure 176 Determine Operating State Desirability Curve 311
Figure 177 Personnel Monitoring Worksheet 311
Figure 178 Structural Monitoring Worksheet 312
Figure 179 System-Level Monitoring Worksheet 313
Figure 180 Power Harvesting Worksheet 314
Figure 181 RSVP Affordability Scorecard 316
Figure 182 RSVP ATD Demo Radar Chart 317
Figure 183 MEMS Spectrometer Concept Illustration 318
Figure 184 Photography of MEMS Spectrometer 319
Figure 185 University of Michigan-TE Device 321
Figure 186 TE with Combustion Chamber 321

Tables

Table 1. IPPD Requirements Specification 10
Table 2 Evolving RSVP Cost Estimates 16
Table 3 Cost Model Assumptions 17
Table 4 Availability Model Input Parameters Varied 18
Table 5 RSVP Functional Requirements vs. Implementation 19
Table 6 RSVP Technical Approach vs Implementation (1 of 2) 21
Table 7 RSVP Technical Approach vs. Implementation (2 of 2) 22
Table 8 Specifications and Goals for the RSVP Power Module. 70
Table 9 Source Requirements and PMM Input Characteristics. 77
Table 10 Comparison of regulator efficiencies 80
Table 11 Power Module Interface Signals. 89
Table 12 Generator Electrical Sensors - ICHM #1 116
Table 13 Generator Mechanical Sensors – ICHM #2 117
Table 14 Reduction Gear Box Sensors – ICHM #3 118
Table 15 Accessory Gear Box/ Turbine Sensors – ICHM #4 119
Table 16 Parametric Data Format 125
Table 17 Parameter Structure 125
Table 18 Time Frequency Message Formats 126
Table 19 Health Vector In Parameter Message Format 127
Table 20 Generic HMS Message Structure 130
Table 21 TCP/IP HMS Master Header 130
Table 22 Header Enumeration 131
Table 23 Outer and Inner Race Bearing Faults 148
Table 24 Rolling Element and Cage Bearing Faults 149
Table 25 Gear and Drive Related Faults 151
Table 26 Feature functions, the resultant FOMs, categorized by preprocessing level 155
Table 27 Watchstation Functional Requirements 170
Table 28 Watchstation Performance Requirements 173
Table 29 Watchstation Interface Requirements 174
Table 30 Watchstation Environmental Requirements 174
Table 31 Watchstation Reliability Requirements 175
Table 32 HMS Debug Windows 222
Table 33 LBES ICHM and SHM Simulated Fault Testing 226
Table 34 Condition #1 Bearing Fault Limit 248
Table 35 Condition #2 Electrical Component Fault 249
Table 36 Condition #3 System Fault - Sensor 249
Table 37 Condition #4 System Fault – Communication Failure 249
Table 38 Condition #1: Bearing fault – Vibration Limit 251
Table 39 Condition #1: RGB Bearing Fault Test Script 252
Table 40 Condition #2: Electrical fault – Generator winding 253
Table 41 Condition #2: Electrical Generator Fault Test Script 255
Table 42 Condition #3 System fault - Vibration Sensor Failure 256

Table 43 Condition #4 System fault – Communication Failure (SHM to ICHM2 and WS to SHM)..... 257
Table 44 Value Score Card 315
Table 45 High Risk Requirements..... 315

1.0 Overview

1.1 Introduction

The Reduced Ship's-crew by Virtual Presence (RSVP) Advanced Technology Demonstration (ATD) is a proof of concept and technology demonstrator, whose purpose is to provide Navy sponsored Research and Development risk mitigation for the DD21 program. The ATD will not directly transition a product to Navy 6.4 development or to Industry, due to the DD21 acquisition strategy. The DD21 industry teams will receive the RSVP developmental end products, as well as test, evaluation, and analysis reports. This will be utilized to validate the RSVP technology application approach to DD21 design, and aid the DD21 industry teams in development and selection of technologies in support of reduced ship manning.

1.2 Approach

The intent of RSVP is to demonstrate elements of key high risk technology areas in the implementation of a Navy shipboard wireless sensor network. RSVP utilized state-of-the-art, developmental, and advanced technologies to address multiple shipboard monitoring requirements and demonstrate timely, accurate, and reliable monitoring and assessment of the ships state at the compartment level. Near-real-time actionable information will be acquired in support of total ship's situational awareness.

Implementation of the technologies and approach demonstrated would significantly reduce manual investigation, improve ship condition assessment time and accuracy, and improve operational readiness and availability. Fully implemented and deployed in the fleet, the demonstrated approach would enable continuous monitoring and assessment of ship compartments and systems. Environmental, structural, and personnel monitoring would reduce detection, classification and response time during a damage control evolution. Machinery monitoring and health assessment would enable rapid determination of system configuration and operational status, early detection of system faults and adverse operating conditions, and timely and efficient asset management and logistic support coordination. The ability to remotely obtain accurate and reliable information rapidly about the ship, ship systems, and ship's personnel would improve operational readiness and availability, and enable reduced manning.

1.3 High Risk Technical Areas

The RSVP program has defined three major areas of high risk technology application development:

- Advanced Sensors in a high density configuration
- Wireless Shipboard Intracompartment Networks
- Data Fusion and Advanced Reasoning in support of Situational Awareness.

The RSVP program has defined four major functional areas for monitoring:

- Environment
- Structure
- Machinery
- Personnel.

The RSVP architecture has several challenging high risk technology elements. A combination of sensors with widely disparate bandwidths must be accommodated in a hybrid network of wired and wireless sensor nodes. The sensors must be nearly maintenance free so that they don't impose a significant maintenance burden. They must also contend on a priority basis for a limited number of receivers. The receivers must be damage tolerant, and be able to operate reliably under severe loading conditions that will occur during system failures or ship casualties.

1.4 Problem Statement

The DD21 program has the goals of a 95 man crew, a cost of acquisition of $750M for 5th ship and follow-on, and O&S costs on the order of a 70% reduction from DDG 51. The drive for reduced manning as an O&S cost reducer was reinforced by the 1995 NRAC Study on ‘Life Cycle Cost Reduction’ [ref 1] and reiterated in a 1996 NRAC ‘Summer Study on Damage Control and Maintenance for Reduced Manning’ [ref 2]. The study determined that a majority of the total cost of ownership of a ship is operation and support costs. Of these costs, manning is identified as the predominant cost driver. As described in the 1996 NRAC study, reducing manning is not straightforward, and “impacts the complex relationship of manpower requirements for operating, maintaining, supporting, fighting and saving the ship. A rational approach to reduce manning requires a systems engineering approach with in-fleet demonstrations of proof of principle.” RSVP is an example of such an approach.

1.5 Current Architecture

Current Navy sensor systems consist of a limited number of hard wired sensors or sensor nets, attached to specific systems or alarm panels. These systems have limited capability, and are costly to install and maintain. Currently, the majority of shipboard monitoring and condition assessment is performed by manual investigation. The ATD was awarded based on the justification that a much larger sensor system than is currently aboard today’s ships will be required to reduce manning, and the cost of installing and maintaining such a wired system would be prohibitive.

1.6 Execution

The RSVP ATD was executed in three phases: System Design (FY99), System Fabrication and Feasibility Demonstrations (FY00), and Shipboard Demonstrations (FY01). This structured approach minimized schedule and cost risk, and also served to maximize early visibility of technical risk issues.

The System Design phase established system level goals and associated requirements for sensors, networks, processors, data fusion, intelligent reasoning, and information distribution. The System Design Phase also defined the system architecture. The architecture definition was supported by prototyping high risk architectural components, including sensors, networks, and algorithms in order to mitigate system-level risks early in the program.

The System Fabrication and Feasibility Demonstration phase incorporated the design, implementation, and validation of component systems, and culminated in the integration and laboratory demonstration of a prototype RSVP system. A successive-level-of-integration approach was taken to ensure critical path risk items were addressed and system problems were traceable.

The Shipboard Demonstration Phase implemented the fully functional land based system, and consisted of one land based, and two shipboard deployments: a Verification and Validation (V&V) at the NSWCCD-SSES DDG-51 Land Based Engineering Test Site (LBES), the second onboard the USS MONTEREY (CG-61) for a 90 day At-Sea trial, and the third onboard the Navy's Damage Control Training and R&D facility, the ex-USS Shadwell.

1.7 Exit Criteria

1.7.1 FY99

1. RSVP Systems Engineering Study
2. Feasibility Demonstrations
    a. RF communications
        - Conduct at sea interference susceptibility tests. Verify shipboard RF communications possible on a fully operational war ship.
        - Perform RSVP radiated interference tests. Verify RSVP RF communications doesn't interfere with shipboard systems.
        - Conduct comprehensive study to determine the effects of fire in a RF communication environment.
    b. Sensor Clusters
        - Demonstrate ultra-low power processing electronics
        - Prototype power management module, power scavenging interface
        - Prototype RF communication module
    c. Data/Information Fusion
        - Demonstrate capability of cross correlation of fragmented data into a compartment level database.
3. RSVP Architecture Design and Model - Define RSVP system and architecture reliability requirements, modeling tools to assess reliability performance.
4. Operator Interface Screens - Define virtual presence, Prototype user interfaces.

1.7.2 FY00

1. Complete Detailed System And Subsystem Designs (Hardware And Software)
2. Fabricate And Test Subsystem Components

1.7.3 FY01

1. LBES Demonstration
2. At-Sea Demonstration
3. Ex-USS Shadwell Demonstration
4. Final Report

1.8 RSVP Integrated Product Team (IPT)

Naval Sea Systems Command, Ship Automations and Controls (NAVSEA 05J3) – Washington, DC.
NAVSEA 05J3 is the Navy's lead for the execution of this project and served as the technical interface for the project to appropriate governmental and commercial agencies. The Execution Manager provided appropriate technical and administrative guidance to the execution team.

Naval Surface Warfare Center, Carderock Division – Ships Systems Engineering Station (NSWCCD-SSES) – Philadelphia, Pa.
NSWCCD 9113 is the Technical Manager of the ATD. NSWCCD 9113 provides project, technical and resource management to ONR for ATD execution. NSWCCD 9534 is the ATD Technical Director. NSWCCD 9534 coordinated all ATD technology development, insertion and testing on Navy platforms. NSWCCD 9534 is directly responsible for the development of the Structural sensors and Power Harvesting technology development and insertion.

Charles Stark Draper Laboratory (Draper) - Cambridge, Ma.
Draper is the RSVP Lead Systems Integrator, and is responsible for laboratory integration and test of all component subsystems. Draper developed the design of the Environmental and Structural sensor cluster. Draper developed the low powered radio for the sensor clusters and APs, as well as the RF communications protocol (Drapernet) for communications between the sensor clusters, PSM HMS and APs. Draper specified the AP units, and developed the AP data acquisition, fusion and communications software.

Penn State Applied Research Laboratory (PSU/ARL) – State College, Pa.
PSU/ARL is the leveraging its development of machinery monitoring technologies and approach for implementing a Machinery Health Monitoring System (HMS). This work was performed as part of the ONR Multi-disciplinary University Research Initiative (MURI) for Integrated Predictive Diagnostics (IPD) and the Condition Based Maintenance (CBM) Accelerated Capabilities Initiative (ACI). PSU/ARL developed component level machinery diagnostics and a hierarchical architecture for implementing distributed processing and diagnostics. The wireless HMS architecture includes Integrated Component Health Monitors (ICHM) or Intelligent Nodes (IN) and System Health Monitors (SHM) to assess machinery state, and to employ diagnostic and prognostic algorithms to determine incipient failures and remaining useful life. RSVP is providing a demonstration vehicle and a system level wireless network for the HMS system, to be installed on an Allison 501 K17 SSGTG. PSU/ARL constructed ICHMs and an SHM under RSVP and developed communications protocols for the machinery information transmission to the APs.

Sarcos Corporation (Sarcos) – Salt Lake City, Ut.
SARCOS is the developer of the PSM. SARCOS developed its PSM under a DARPA program for the Army Rangers. SARCOS modified its PSM unit for RSVP to be a belt device, and integrated a radio compatible with the RSVP wireless network.

Oak Ridge National Laboratory (ORNL) – Oak Ridge, TN.
ORNL is responsible for the development of the PMM. ORNL provided a custom designed ASIC, and associated electronics for gathering and storage of energy from Power Harvesting sources, as well as power regulation to the sensor clusters.

BB&N Technologies (BB&N) – Mystic, CT.
BB&N is responsible for developing the watchstation communications and display software (MMI). BB&N also developed the messaging format for the HMS system.

Honeywell Technology Center (Honeywell) - Minneapolis, MN
Honeywell is responsible for developing the MMI design specifications, and usability testing.

Carlow International, Inc (Carlow) – Falls Church, Va.
Carlow performed the Manning Functional Analysis in FY99, and is currently performing Manning Analyses and Human Factors testing to determine manning reduction metrics and operator usability for the RSVP concept.

2.0 Top Level Requirements

2.1 Office of Naval Research (ONR)

ONR directed RSVP to target manning reductions in shipboard watchstanding to complement the ONR sponsored DC-ARM program. DC-ARM is developing automation systems to reduce manning in the area of Damage Control. The RSVP team chose a limited set of HM&E functionality (environment, structure, machinery, personnel) for automated watchstanding. The first constraint on the RSVP concept was chosen by ONR and PMS 500, for a *wireless* shipboard sensor system. The ATD was awarded based on the justification that a much larger sensor system than is currently aboard today's ships will be required to reduce manning, and the cost of installing and maintaining such a wired system would be prohibitive. The RSVP team has focused its efforts on the technology, and technology approach to affordably and wirelessly acquire and process large amounts of data/information, as opposed to a sensor network optimized for automated control.

2.2 Integrated Product Process Development (IPPD)

RSVP employed a systems engineering methodology entitled Integrated Product and Process Development (IPPD). This methodology and associated software toolset provided a systems engineering approach to design and development including an emphasis on affordability. Affordability is a crucial requirement for DD21. IPPD led the RSVP team through the process of identifying customer requirements, developing and assessing technology alternatives, determining variabilities, performing risk analyses, and estimating performance, producibility, and cost.

The IPPD process identified potential 'Customers', major system goals and scope (based on Customer inputs), and performance and functional requirements (through subject matter experts and Customer representatives). Some identified customers were ONR, PMS 500, PMS 400, PMS 312, Blue and Gold Teams, sailors, commercial equipment manufacturers, Shipyards, NAVSEA Engineers, etc. The IPPD identified customers were narrowed down to two categories to effectively specify RSVP system requirements:

- Industry – Requirements specified are for all the capabilities required of a fully functional RSVP system for future Naval ships.
- ATD – Requirements specified for all of the capabilities defined within the scope of the ATD and Demonstrations.

RSVP then concentrated on designing a system that met the ATD requirements, but that would not preclude the Industry requirements, for the system had to be designed to be extensible to a final shipboard product. Once the requirements were gathered, organized and placed into customer categories, they were assigned ranges and desirabilities. Desirability curves were calculated and issued weights. These curves were utilized to determine Measures of Effectives (MOEs), and against these the final test data are

evaluated. DD21 Blue and Gold teams have been actively involved in RSVP. RSVP has chosen not to acquire or use any competition sensitive information in its design and execution. This was done to keep all of RSVP development available to both teams, and to avoid any restrictions in design.

2.3 Functional and Performance Requirements Overview

The requirements given here are those for the ATD customer, not Industry.

2.3.1 System Functional Requirements

- RSVP will monitor ship spaces in four functional areas -- environment, structure, machinery, and personnel status -- and provide an operator with sufficient information about each space to allow it to be left unmanned during normal conditions.
- RSVP will provide data suitable for the needs of graphic interfaces.
- RSVP will provide data archiving.
- RSVP will provide an operator with the health status of its own components.
- RSVP will provide an operator with the environmental status (temperature, humidity, etc.) of a ship space.
- RSVP will alert an operator to an emergency environmental condition (fire, flood, etc.) in a ship space.
- RSVP will provide an operator with the recent environmental history of a ship space.
- RSVP will provide the status (hull girder stress, hull acceleration, corrosivity, etc.) of a ship's primary structure.
- RSVP will alert an operator to an emergency structural condition onboard a ship.
- RSVP will provide an operator with the recent history of ship structure and contents
- RSVP will provide the operational status of machinery.
- RSVP will provide the configuration of machinery.
- RSVP will provide the health status of machinery.
- RSVP will provide an operator with physiological status (pulse, skin temperature, etc.) of crew members.
- RSVP will provide an operator with the location (identification of ship space) of crew members.

2.3.2 Performance Requirements

Performance requirements define how the system is to behave to succeed in its intended mission.

- RSVP will function during all operational and damage conditions.

- RSVP Sensor Clusters will operate for an extended time (goal is five years from installation) with no maintenance.
- RSVP sensors will provide data based on time, event, or query.
- RSVP will provide video to an operator.
- RSVP Sensor Clusters will facilitate inexpensive installation by means of (a) wireless communication and (b) a simple installation procedure, and (c) Original Equipment Manufacturer (OEM) integration with respect to machinery.
- RSVP will gracefully and autonomously accommodate RSVP components coming on line and going off line under all conditions.
- RSVP will provide a means for an operator to modify algorithms in remote stations without the need for separate operations for each remote station.
- RSVP will coexist with other shipboard electronic equipment.
- RSVP will accommodate additional future capabilities.
- RSVP will be scalable to accommodate ship spaces.
- RSVP will be usable worldwide without the need for electromagnetic licensing.
- RSVP will adopt open-system architectures and include definition of all interfaces.
- RSVP will alert an operator that there is a fire in a compartment.
- Goal for probability of missed detection: 0.2% of actual fires.
- Goal for time to detection of a Class A fire (due to combustibles on the ship, not an external event): 5 min.
- Goal for probability of false alarm: 2/year per ship 1 (approximately 500 compartments).
- RSVP will alert an operator that there is an incipient fire in a compartment.
- Goal for alert time prior to ignition: 5 min.
- RSVP will alert an operator that there is a spill of liquid in a compartment.
- Goal for probability of missed detection: 2% of actual situations. 1
- Goal for time to detection: 30 seconds.
- Goal for probability of false alarm: 2/year per ship (approximately 500 compartments).
- RSVP will alert an operator that an environmental limit has been exceeded.
- Goal for probability of missed detection: 1% of actual situations.
- Goal for time to detection: 30 seconds.
- Goal for probability of false alarm: 2/year per ship (approximately 500 compartments).
- Goal for probability of false alarm: 2/year per ship (approximately 500 compartments).
- RSVP will monitor ambient conditions, such as temperature, humidity, air pressure, and vacuum.
- RSVP will monitor acceleration on the hull and hull contents for all loading conditions.
- RSVP will monitor stress on hull girders and other primary structural members for all loading conditions.
- RSVP will monitor the corrosiveness of ship's structural members.
- Goal for probability of missed detection: 20% of actual situations.

- Goal for probability of false alarm: 0.2/year per ship (approximately 500 compartments).
- RSVP will provide Condition-Based Maintenance (CBM) capability.
- RSVP will supply an operator with machinery health and operational status information.
- Goal for maximum latency following detection of change in status: 1 second.
- RSVP will alert an operator that there is an adverse machinery condition
- Goal for probability of missed detection: 2% of actual situations.
- Goal for probability of false alarm: 2/year per ship (approximately 500 compartments).
- RSVP will alert an operator that a crew member is undergoing extreme fatigue.
- RSVP will allow an operator to continuously track the location (to the compartment level) of crew members over the range of motion from stationary to running.
- RSVP will allow an operator to track crew members' vital signs with a maximum latency of 0.5 minute.

2.3.3 IPPD Requirements Specification

Table 1. IPPD Requirements Specification

Rqmt #	Requirement	How Measured	Objective	Lower Thres.	Upper Thres.	How tested
1	Fire Detection	Percentage Detection w/in 5 mins	100.00	95.00		Total no. of fires detected/total no. of fires
2	Fire Detection	Number False Alarms during demo period	0.00		1.00	Measure amt false alarms/entire test period
3	Fire Detection	Time to Detection (min)	1.00		5.00	Measure time from point of ignition
4	Monitor Temperature Set Point	Percentage Detection w/in 30 secs	100.00	99.00		Heat up to above threshold, determine time to detect, accumulate statistics
5	Monitor Temperature Set Point	Number False Alarms during demo period	0.00		1.00	Count false alarms, divide by time
6	Monitor Temperature Rate of Change	Percentage Detection	100.00	99.00		Heat up quickly, measure time to detect
7	Monitor Temperature Rate of Change	Measurement sensitivity: Delta T / time [deg F/sec]	1.00		10.00	
8	Monitor Temperature Rate of Change	Number False Alarms during demo period	0.00		1.00	Measure # of alarms, use supporting data to determine # of false alarms
9	Monitor Humidity	Measurement Accuracy (percent)	1.00		5.00	Compare to independent instrument

10	Monitor Temperature	Measurement Accuracy (degrees)	1.00		5.00	Compare to independent instrument
11	Monitor Pressure	Measurement Accuracy (psi)	0.25		1.00	Compare to independent instrument
12	Detect Gas Composition (non chemical agent)	Measurement Accuracy (percent concentration)	1.00		5.00	Compare to independent instrument
13	Remote Visual	Coverage (percent compartment covered)	95.00	75.00		Perform survey
14	Detect Noise Event (clang)	Percentage Over Background (%)	3.00		10.00	Compare to independent instrument
15	Measure Flooding	Measurement Accuracy (inches)	0.50		0.75	Compare to independent instrument
16	Measure Flooding	Number False Alarms during demo period	0.00		1.00	Measure # of alarms, use supporting data to measure # of false alarms
17	Monitor Hatch Closure	Measurement Accuracy (percent)	100.00	95.00		Simulated door closure
18	Monitor Hatch Open	Measurement Accuracy (percent)	100.00	95.00		Simulated door open
19	Notification of Adverse Condition of Machinery	%of alarms detected out of number simulated during demo period	100.00	95.00		Measure # of alarms, use supporting data to measure # of false alarms
20	Notification of Adverse Condition of Machinery	Percentage Detection w/in 5 mins	100.00	95.00		Sim/stim fault, measure time to notification at watchstation
21	Determine Operating State of Machinery	Seconds	1.00		60.00	Monitor GTG, measure time for notification to watchstation
22	Determine Operating State of Machinery	Percent Accuracy	100.00	97.00		Number of correct operating states reported divided by the number of operating states tested
23	Track Operating Profile of Machinery	Scale: 1 - 5	5.00	3.00		Access trend data through watchstation
24	Severity (Confidence level) of Machinery	Percentage of conditions detected out of number simulated during demo period.	100.00	90.00		Translate confidence level into measure of severity based on alarms and alerts.
25	Diagnose Fault of Machinery	%of alarms detected out of number simulated during demo period	100.00	95.00		Count (correlate with data) them and divide by time
26	Diagnose Fault of Machinery	Number of Missed Detections during demo	0.00		1.00	Faults were simulated using real data coming off the SSGTG. All faults simulated were detected and reported to the watchstation
27	Determination of Condition of Machinery	% of conditions detected out of number simulated during demo period	100.00	95.00		Sim/stim

28	Determination of Condition of Machinery	Number of Missed Detections during demo	0.00		1.00	Sim/stim
29	Monitor Hull Stress	Measurement Accuracy (psi)	10.00		100.00	Data gathered by RSVP System and analyzed by independent expert.
30	Monitor Hull Acceleration	Measurement Accuracy (g)	0.10		0.20	Data gathered by RSVP System and analyzed by independent expert.
31	Monitor Hull Shock	Measurement Accuracy (g)	1.00		5.00	
32	Detect Adverse Physiological Status	Number False Alarms during demo period	0.00		15.00	Measure # of alarms, use supporting data to measure # of false alarms
33	Detect Adverse Physiological Status	Percentage Detection w/in 30 secs	100.00	95.00		Scripted test scenario, e.g. lying down, running. Observe response.
34	Monitor Personnel Location	Scale: 1 - 5	5.00	3.00		Perform survey
35	Reduce Manhours	Percent Manhours/year/ship	10.00	5.00		NAVMAC will do study
36	Installation Costs	Dollars (M)	5.00		25.00	Not applicable
37	System Acquisition Costs	Dollars (M)	24.00		45.00	Not applicable
38	O&S Costs (Crew)	Dollars (M)	2.50	1.50		Comparison of NAVMAC report and cost estimates
39	Development Costs	Dollars (M)	5.00		10.00	Transition Plan
40	Time to Break-even Point	Years	3.00		15.00	Cost Analysis
41	O&S Cost of RSVP	Dollars (M)	25.00		100.00	Final Cost Study/Report
42	Provide Situational Awareness	Scale: 1 - 5	5.00	4.00		NAVMAC study
43	Data Archiving	Scale: 1 - 5	5.00	1.00		Demonstration of data retrieval
44	Provide System Health Status	Time to notification after detection of lost capability (secs)	1.00		60.00	Introduce loss of capability to system; measure notification time
45	Provide System Health Status	Number False Alarms during demo period	0.00		1.00	Measure # of alarms, use supporting data to measure # of false alarms
46	Wireless	Scale: 1 - 5	5.00	3.00		Analysis of the design
47	Technology Demonstration	Date	2001.00	2001.00		Completed ATD by October 2001
48	Harvested Power	% of needed power	100.00	0.00		Measure output of power harvesting devices

2.4 Manning Functional Analysis (MFAS)

The IPPD requirements were derived, in part, through the "RSVP Manning Functional Analysis Study (MFAS)"[ref 3]. This study performed a top down functional analysis, based on the DD21 Operational Requirements Document (ORD). The DD21 ORD specified the types of missions and capabilities that DD21 must perform. From the top down functional analysis were derived baseline DD21 Top Level Operational Scenarios, which were broken down into tasks, then to functions. The functions then were evaluated for their applicability to RSVP type of automation. Functions that could be automated by RSVP were identified, and the types of information required to perform the functions were delineated. This required information was integrated into the RSVP IPPD requirements generation process.

2.4.1 MFAS Information Requirements

The following are a subset of RSVP information requirements that were identified in the MFAS, Appendix A - Functional Analysis and Requirements. These requirements were fed into the RSVP IPPD Requirements generation process.

	Engineering/Damage Control Tasks	Information Requirements
1.	Account for personnel	Personnel Location/Condition
2.	Communications	Voice Communications
3.	BDA assessment	Compartment View
4.	Investigation - Fire	Fire location, size, source
5.	Investigation - Flooding	Flood location, rate, source
6.	Evaluate desmoking system	Ventilation flow rate

Machinery Monitoring Tasks	Information Requirements
Turbine/shaft output acceptable	Shaft speed & bearing temp., lube oil flow
Verify oil pressure	Shaft speed & bearing temp. lube oil flow
Verify fuel pumps, heaters, flow	Fuel transfer tank level & valve align.
Verify SSGTG response	Electrical dist. fuel, lube oil
Verify SSGTG operation	Turbine speed, electrical output
Verify turbine, generator, lube oil	Fuel service tank level & lube oil supply

2.4.2 DD21 Top Level Scenario Summary

The following is an excerpt of a DD21 top-level operational scenario developed in the MFAS:
Mission (Based on DD21 ORD):

2. Three DD 21 platforms as part of a theater force supporting an amphibious raid conforming to USMC Operational Maneuver from the Sea (OMFTS) in a two day mission.
    a. DD 21 #1 performs land attack segments
    b. DD 21 #2 and #3 perform MIW engagements
3. Engagements:
    a. Mine field neutralization.
    b. Support of a land attack on an Iranian chemical plant.
4. Engagement Objective:
    a. Neutralize shore batteries and provide fire support to an airborne amphibious mission to retrieve chemical weapons located approximately 30 miles inland Criteria for Engagement Success.
    b. Successful timely removal of shore batteries and SAM sites.
    c. Successful fire support of airborne amphibious operation.
    d. Successful ship self defense from surface craft, coastal missiles, and hostile aircraft.
    e. Successful identification of mines and support of Mine Countermeasures (MCMs) removing the mines.
    f. No losses due to friendly fire
    g. Avoid friendly aircraft in the area.
    h. Respond to simultaneous air and surface threats.
    i. Conduct simultaneous traverse through a mine field.

2.4.3 RSVP Applicable Scenario Engagement Events

The following are engagement events, derived from the DD21 Top Level Scenario, where RSVP can be applied:

1. Response to a mine hit on DD 21 #2.
2. DD 21 #3 conducting corrective maintenance – propulsion system.
3. Response to an Anti-Ship Cruise Missile (ASCM) hit on DD 21 #1.

2.4.4 RSVP Demonstration Scenarios

RSVP has developed four major demonstration scenarios to support the top level scenario and the RSVP applicable engagement events:

Scenario 1. Machinery Maintenance
Scenario 2. Steaming in Heavy Seas Scenario
Scenario 3. Missile Hit above the Waterline Scenario
Scenario 4. Mine Encounter with Hull Breach and Flooding Scenario

3.0 Systems Engineering

3.1 System Design Constraints

The wireless sensor system approach is not a forgone conclusion for optimal technology application to reduce shipboard manning. RSVP had to be validated against many critical and competing requirements and constraints. Each requirement and constraint impacted all others, and required many engineering tradeoffs.

3.1.1 Capability

Estimates are that at least an order of magnitude more sensors will be required then are on ships today to provide the necessary coverage for reduced manning. There will also be required many more sensor types than currently are on ships, or even available commercially. The system requires a large amount of processing power that does not currently exist shipboard for data fusion of sensor data. The system also needs to provide assessment, situational awareness and advanced reasoning processes.

3.1.2 Cost

The system cannot cost more to purchase and operate than the cost of the men removed. The cost of purchase and installation also has to be held to a certain percentage of total ship acquisition cost. The Navy also realizes that it can no longer afford to create a military-only technology solution. There has to be a private industry demand for these technologies to that they can be bought at prices that are a result of manufacturing economies of scale.

3.1.3 Reliability

The system has to provide required functionality without major maintenance for all shipboard operational environments. The system cannot 'fail' at the same rate as current shipboard sensing systems. This would require putting crew back onboard just to maintain the system, and therefore create a costly maintenance burden. Estimates are for the system to require little or no maintenance for 3 to 5 years, the typical ship overhaul cycle.

3.1.4 Survivability

The system has to function in severe combat and damage environments. It has to be dynamically reconfigurable. Situational awareness of the entire ship should be maintained with a graceful degradation of capability.

3.2 Models

3.2.1 Cost Model

At the beginning of the RSVP program (Winter 1999), an estimate was made of the cost of sensors plus people to instrument a DDG-51 in that year. This was compared against an estimate of sensors plus people to instrument a DD-21 in the year 2008. These estimates and the detail behind them were included in the RSVP Systems Engineering Study [ref 4], and are summarized in Table 2. At the end of the program (Summer 2001), two similar exercises were performed to estimate the cost of sensors and people to instrument a DD-21. The first 2001estimate was for the current year, when the cost of a Sensor Cluster is estimated to be $2000; the second 2001 estimate is for an unspecified future year when the projected cost of a Sensor Cluster had declined to $500. This information is also summarized in Table 2Table 2. In all cases the system cost is for equipment and people for one ship with a lifetime of 40 years.

Table 2 Evolving RSVP Cost Estimates

Time of Estimate	Platform	Platform Time Frame	Sensor Cluster Cost	Sailor MM/M	System Cost*
Start of Program, Winter 1999	Wired DDG-51	1999	$3000	34	$128 M
	Wireless DD-21	2008	$120	0	$54 M
End of Program, Summer 2001	Wireless DD-21	2001	$2000	0.5	$89 M
	Wireless DD-21	TBD	$500	0.5	$57 M

*** Cost of equipment and people for one ship for 40 years**

Table 3 summarizes the differences in assumptions between the 1999 and 2001 exercises. There are large differences in the cost of individual Sensor Clusters and Access Points and the number of these units per ship space. These differences are based on RSVP program experience. There is also a difference in the number of man-hours associated with repairs. The hope at the outset was that reliability and redundancy would be sufficient to ensure that no maintenance on RSVP would have to be performed. Based on availability modeling performed by the RSVP program, this goal is impractical, and a small number of man-hours for repairs is now being assumed. While it would be possible to provide a zero-maintenance system, such a system would require Sensor Clusters and Access Points that are much more reliable, which would command a much higher price.

Table 3 Cost Model Assumptions

Attribute	1999 estimate for DD-21 if done in 2008	2001 estimate for DD-21 if done in 2001	Comments
Machinery spaces per ship	N/A	20	RF characteristics different from testing
Total spaces per ship	500	506	Based on number of spaces on a DDG-51. Treat each MER as 4 smaller spaces; RF propagation between smaller spaces poorer than tested
Service calls/repairs per week	None	9/20	Indicated by Availability model
Sensor Clusters per machinery space	50	20 (includes 10 ICHMs)	Higher number impractical due to SC size & limits on locations
Access Points per machinery space	4 (assumes SHM functionality built into AP)	4 (assumes SHM functionality built into AP)	
Sensor Clusters per non-machinery space	50	10	Higher number impractical due to SC size & limits on locations
Access Points per non-machinery space	4	2	
Sensor Cluster cost	$120	$2000	Individual transducers cost approx $100 each in 2001
Access Point cost	$3000	$8000	Approximate cost of an industrial PC and camera

3.2.2 Availability

RSVP was not given specific availability goals. However, to assess the practicality of the technical approach, and to come to a balance between reliability and maintenance costs, an availability model was developed. An availability target was computed from DD-21 availability requirements, and from assumptions about the number of systems that must work for DD-21 to be considered available and the number of compartments that contain those systems. A Monte Carlo model was developed, and its results validated by comparing them to those produced by a rudimentary Markov model. Availability was contrasted against cost. The results of this effort are documented in the Availability Modeling Report and its addenda [ref 5,6,7]. It should be noted that the “repair all on

threshold" maintenance strategy yields the highest availability per unit cost. That is, failed equipment is not repaired unless a compartment has experienced enough failures that it is no longer considered available. At that point, a technician is dispatched to the compartment, and all failed components are repaired.
Table 4 gives the availability model input parameters that were varied.

Table 4 Availability Model Input Parameters Varied

Aspect	Parameter Baseline	Parameter Variations
Number of Environment and Structure Sensor Clusters	**15 of each type**	**10 of each type; 25 of each type**
Reliability of Access Points, Video, Sensor Cluster core (see Note 1), and Personal Status Monitors	**50,000 hr**	**25,000 hr**
Mean time to repair for Access Points, Video, and Sensor Clusters	**Access Points: 2 hr** **Video, Sensor Clusters: 1 hr**	**Access Points: 4 hr** **Video, Sensor Clusters: 2 hr**
Repair strategy	**"Repair all on threshold" (see Note 2)**	**"Repair on failure;" "repair on threshold" (see Note 2)**
Number of Sensor Clusters needed to accomplish data fusion	**5**	**10; 12**

Note 1:

Sensor Cluster core consists of radio, processor, and power management module. Failure of any part of core constitutes failure of entire Sensor Cluster. Sensors were considered to be separate elements. Failure of a sensor does not prevent the rest of the Sensor Cluster from being used.

Note 2:

***Repair on failure*: A technician is sent to the compartment to perform a repair whenever a component fails.**

***Repair on threshold*: A technician is sent to the compartment to perform repairs whenever enough failures have occurred to make the compartment unavailable. All failed components that contributed to the unavailability are repaired.**

***Repair all on threshold*: A technician is sent to the compartment to perform repairs whenever enough failures have occurred to make the compartment unavailable. All failed components are repaired.**

3.3 Requirements Implementation

Table 5 identifies the functional requirements specified in 4.1.1 of the Systems Engineering Study, and notes which requirements were implemented. It should be noted that these requirements were on a deployed system that might be developed from RSVP principles, not the RSVP system itself, so complete compliance would not be expected.

Table 5 RSVP Functional Requirements vs. Implementation

Functional Requirement Described in Systems Engineering Study	Implementation	Comments
RSVP will monitor ship spaces in four functional areas—environment, structure, machinery, and personnel status—and provide an operator with sufficient information about each space to allow it to be left unmanned during normal conditions.	No manning was required to support environment, structure or machinery sensing.	This was the intention of the program
RSVP will provide data suitable for the needs of graphic interfaces.	Implemented	Graphical interface implemented to show capability
RSVP will provide an operator with the health status of its own components.	Health information was provided for the machinery health monitoring system only, which consisted of sensor and communication health as well as temperature of the Intelligent Nodes	Health status of RSVP components was determined by running lower lever programs, but not reported to the watchstation
RSVP will provide an operator with the environmental status (temperature, humidity, etc.) of a ship space.	Implemented	
RSVP will alert an operator to an emergency environmental condition (fire, flood, etc.) in a ship space.	Implemented	Both fire and flooding conditions detected
RSVP will provide an operator with the recent environmental history of a ship space.	Implemented	
RSVP will provide the status (hull girder stress, hull acceleration, corrosivity, etc.) of a ship's primary structure.	Implemented, except for corrosivity	
RSVP will alert an operator to an emergency structural condition onboard a ship.	Not Implemented	Sensor data was acquired by the system. Watchstation alerts and alarms were not implemented due to time and budget constraints.

RSVP will provide an operator with the recent history of ship structure and contents.	Implemented	
RSVP will provide the operational status of machinery.	Implemented	
RSVP will provide the configuration of machinery.	Partially Implemented	Application of additional sensors/ acquisition of existing sensor data constrained by limitations in altering SSGTG accessing signal form machinery control LAN
RSVP will provide the health status of machinery.	Implemented	
RSVP will provide an operator with physiological status (pulse, skin temperature, etc.) of crewmembers.	Implemented	
RSVP will provide an operator with the location (identification of ship space) of crewmembers.	Implemented	

Table 6 enumerates the overall RSVP technical approach features listed in the Systems Engineering Study, section 4.6.1.1. The table also indicates the actual implementation of each feature by the RSVP program.

Table 6 RSVP Technical Approach vs Implementation (1 of 2)

Technical Approach Described in Systems Engineering Study	Feature Implemented	Comments
Access Points hard-wired to ship's power and a data network	Implemented	
Sensor Clusters powered by energy scavenging, backed up by battery	Energy scavenging demonstrated, but Sensor Clusters powered by battery	Energy harvesting technology immature; prototype devices bulky and require customized installation procedures
Sensor Clusters use wireless RF link for communication with Access Point	Implemented	
Sensor Clusters have downlink capability	Implemented	
Machinery SHM and ICHMs powered by power to machine being monitored	Used Ships Power	Ships power used for HMS. Power not taken from GTG skid – approach minimized interface issues with approval for installation of HMS on GTG
SHM communicates with AP	Implemented	
ICHMs communicate with SHM via wireless link	Implemented	
SHM and ICHMs have downlink capability	Implemented	
Personnel Status Monitors powered by battery	Implemented	
PSMs communicate via wireless link	Implemented	
PSMs have downlink capability	Implemented	

Table 7 selectively enumerates additional technical approach features from the Systems Engineering Study. The table also indicates the actual implementation of each feature by the RSVP program.

Table 7 RSVP Technical Approach vs. Implementation (2 of 2)

Technical Approach Described in Systems Engineering Study	Feature Implemented	Comments
Video at each Access Point	Video and audio at each Access Point	Save cost of implementing analysis of audio information
Radio-frequency communication via continuous-wave transmissions in 2.4 GHz industrial, scientific, medical band	As described, except for communication between AP and SHM, IEEE 802.11 2.4 GHz spread spectrum commercial radios used	
Random access (Aloha without acknowledge) used for RF medium access	Sensor clusters employ time-division multiplexing	Concerns about loss of data caused by packets colliding when all Sensor Clusters transmitting at high rate due to damage situation
	Machinery employs IEEE 802.11	Transmission of large data block between AP and SHM would take tens of minutes at 57.6 kb/s
Data rate = 200 kb/s	Data rate = 57.6 kb/s	Compatibility with low-power microprocessors
Data encryption	Not implemented	Not necessary for proof of concept
Sensor Clusters monitor temperature, smoke, humidity, carbon monoxide, closure switch, pressure, noise, strain, acceleration, humidity, sodium ion	- Sodium ion omitted - Oxygen and differential pressure added - Both photoelectric and ionization smoke detectors included	Carbon dioxide sensor would have been useful for fire detection, but no low-power sensor available
Machinery equipment monitors vibration, temperature, generator 3 phase current and voltage, exciter current and voltage	Implemented	Final sensor suite limited based on requirement not to alter SSGTG or tap existing signals (control system). Full sensor suite not required for demonstration proof of concept.
Personnel monitoring of heart beat, skin temperature, ambient temperature, acceleration	Implemented	
Data fusion to employ NDDS to realize publish/ subscribe	Implemented	

3.4 Risk Mitigation

3.4.1 RF Testing

3.4.1.1 RF Radiated/Susceptibility Tests

A critical part of the RSVP system is the wireless communication network. It must operate reliably in a less than ideal environment inside of ship spaces where there is a lot of machinery and other obstacles disturbing radio wave propagation. In addition, there are many electromagnetic noise and interference sources that could degrade its operation.

The purpose of the shipboard EMI/EMC testing was to determine a typical electromagnetic environment in three different ship spaces in order to find potential interference and noise problems for the RSVP Communication System. These tests were made aboard the USS Normandy (CG-60), a Ticonderoga Class Aegis Cruiser. They were conducted during the period of April 6-8, 1999 off Norfolk, Virginia under conditions where most shipboard systems were operating.

Since the operating frequency band for RSVP is planned to be the 2.4 GHz ISM band, this was of the most interest. Also, since the present RSVP receiver design uses IFs of approximately 100 MHz and 10.7 MHz, the bands surrounding these frequencies were also of critical interest.

The EMI/EMC measurements were made over several bands spanning the range 10 KHz to 3 GHz using a set of antennas and a spectrum analyzer. The entire band was included in order to have a point of reference should interference problems develop in the sensors or in data and signal processing electronics.

The “Shipboard EMI/EMC Test Report ” [ref 8] describes the test methodology, test environment, pertinent measurement data and the conclusions drawn from the at-sea testing. The cooperation and assistance of the officers and enlisted crew of the USS Normandy is gratefully acknowledged and sincerely appreciated.

The EMI/EMC Shipboard Tests on the USS Normandy produced encouraging results. Interfering signals in the desired 2.4 GHz ISM band were found to be non-existent in the ship spaces measured. The propagation tests showed that communication at the desired data rate of 200 kbit/sec can be achieved under near “worst case” conditions providing the receiver’s noise figure is sufficiently low. Under actual operating conditions with several access points, SNR’s should be significantly higher on average.

3.4.1.2 Breadboard Radio Testing

Radio tests were conducted aboard the USS Normandy (CG-60) at Naval Station Norfolk during the week of 02 January 2000. The purpose of the tests was to verify the performance of the RSVP breadboard radios in a realistic environment and to further determine the radio channel characteristics in Main Engine Room 2 and Auxiliary Machinery Room 1. These spaces present a severe multipath propagation environment due to the presence of many large pieces of machinery that reflect and scatter radio waves.

It is in fact this severe multipath environment that actually enhances the overall performance of the RSVP radio system. By providing a large number of reflected and scattered signals of random phase and amplitude, the shadowing and blockage effects of the machinery are minimized. Reliable links may be established over paths which provide absolutely no direct line-of-sight. This means that the number of Access Points required to communicate with sensor clusters may be kept low, perhaps only two or three even for large spaces like the Main Engine Room. The data taken actually show that a single, carefully placed Access Point Radio could reliably communicate with most any point within the room. System availability requirements would dictate more than one, so a quantity of two or three is probably a more realistic minimum.

The prototype of the low power RSVP radio is shown in Figure 1.

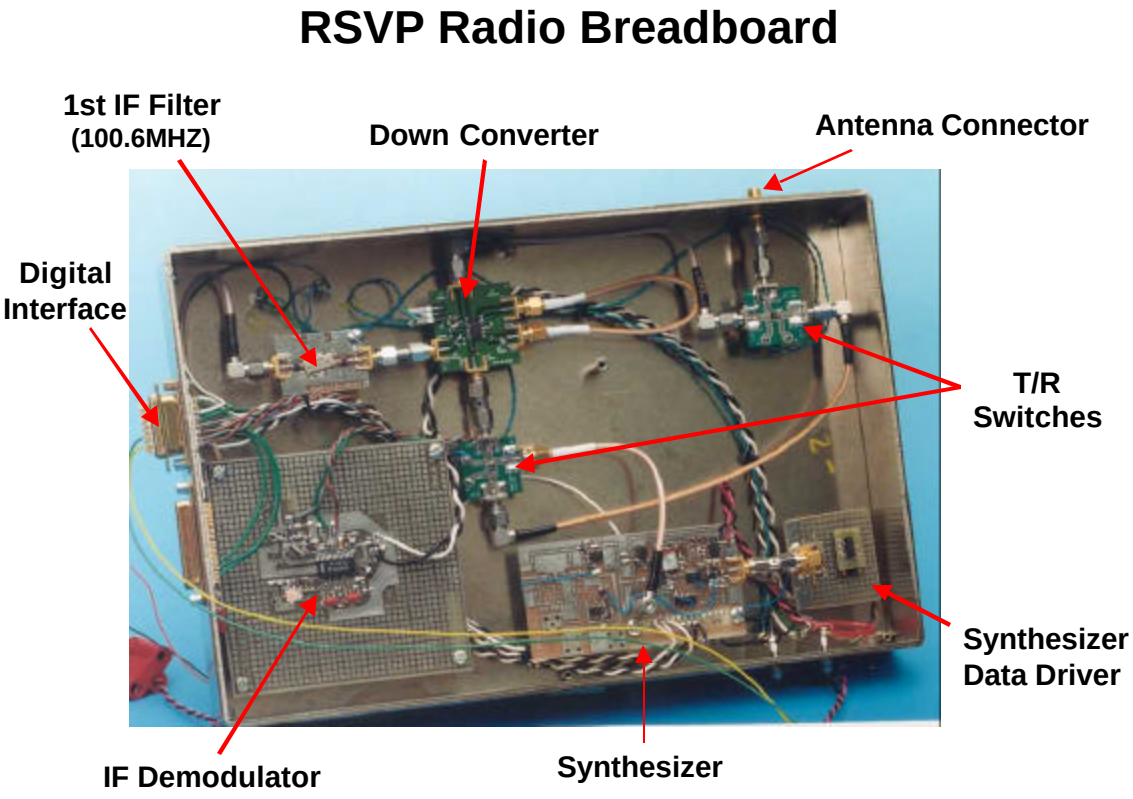

Figure 1 RSVP Radio Breadboard

3.4.1.3 RF/Fire Testing

The Naval Postgraduate School was tasked to conduct a study on the effects of fire on RF communications. The objective was to quantify experimentally the effects of ship compartment fuel fires (diesel and heptane) and the water mist fire extinguishing system on the propagation of RF signals in the 2.4 GHz to 2.485 GHz ISM frequency range using the ex-USS Shadwell fire research facilities operated by the Naval Research Lab. The test was conducted in May of 1999. RF Attenuation in the ISM band was measured using a pair of narrowband, narrow beam (high gain/directivity) linearly polarized antennas. The effects of fire and water mist fire-extinguishing system were also measured using a pair of non-directional patch antennas which are more representative of typical communications antennas for indoor use. The antennas were positioned in the "simulated" machine space such that the "fire source" was approximately halfway between the transmitting and the receiving antenna. The measurements indicated that the effect of a ship compartment fire and the water mist fire extinguishing can be modeled as rapid, frequency selective fading with relatively small average value of signal loss (the probability of signal gain is slightly smaller than the probability of signal loss). Complete details can be found in the "Effects of Fire and Fire Extinguishing on Wireless Communications in the 2.4 GHZ ISM Band" report [ref 9].

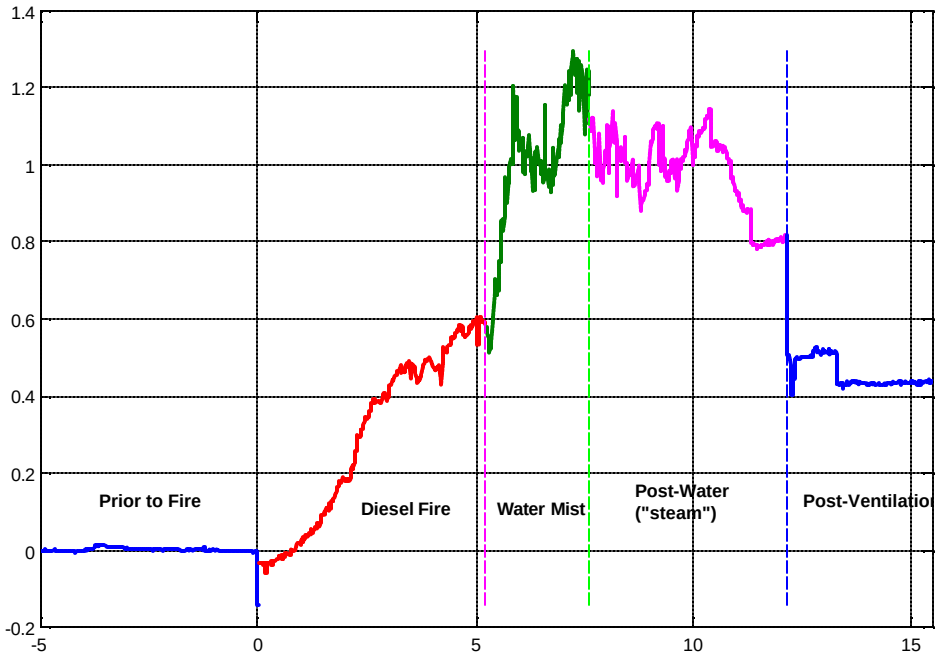

Figure 2 Frequency-Averaged Attenuation for Directional Antennas

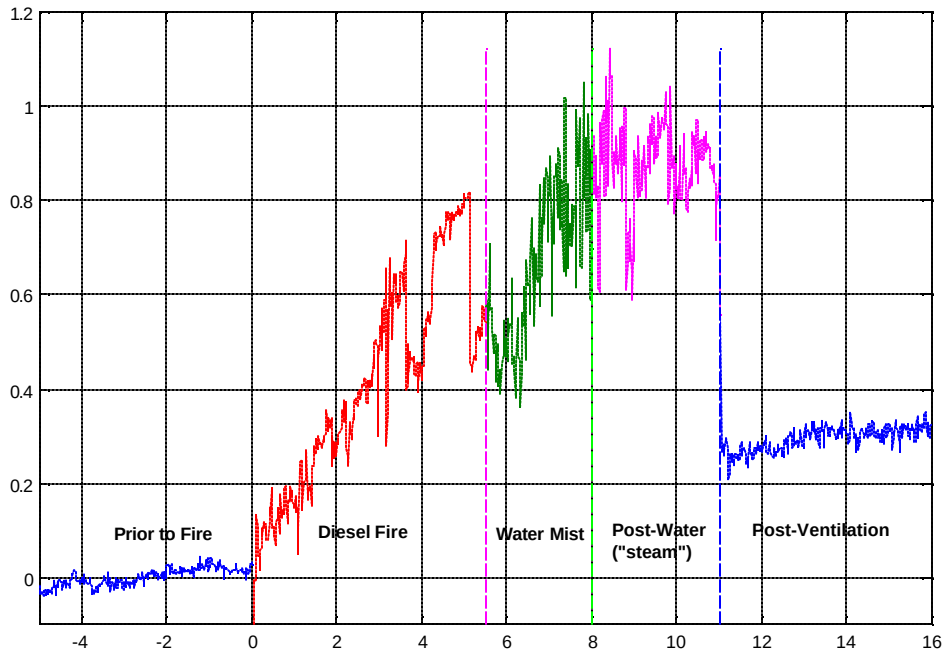

Figure 3 Frequency-Averaged Attenuation for Patch Antennas

The effects of fire and water mist fire extinguishing were found to be profoundly different for directional (high gain) and non-directional (low gain) antennas
The difference is caused by the prevalence of a single, direct path for the directional antennas as opposed to the multipath propagation for the non-directional antennas
The attenuation per unit length for directional antennas exhibits relatively small variations with time and frequency. The attenuation due to water mist extinguishing was substantially larger than the attenuation due to the fire itself.

The average for attenuation for Directional Antennas (includes fire and water mist extinguishing) in the entire 2.4 GHz ISM band was 0.69 dB/m for vertical, and 0.54 dB/m for horizontal, with almost 100% of the values in the 0 to 2 dB/m range.
The loss of only 2db was encouraging, indicating that the RSVP RF transmission would be able to overcome this attenuation. The patch antenna produced similar results.

3.4.1.4 Demonstrate Ultra-Low Power Processing Electronics

To better understand the high-risk areas of the ultra low power sensor module, Draper prototyped the environmental sensor module. Included in the prototype were the power management algorithms necessary to achieve the lower power attribute. Sensor interface electronics were developed and proven out. The FY99 prototype sensor module is shown in Figure 4.

Breadboard Environmental Sensor Cluster

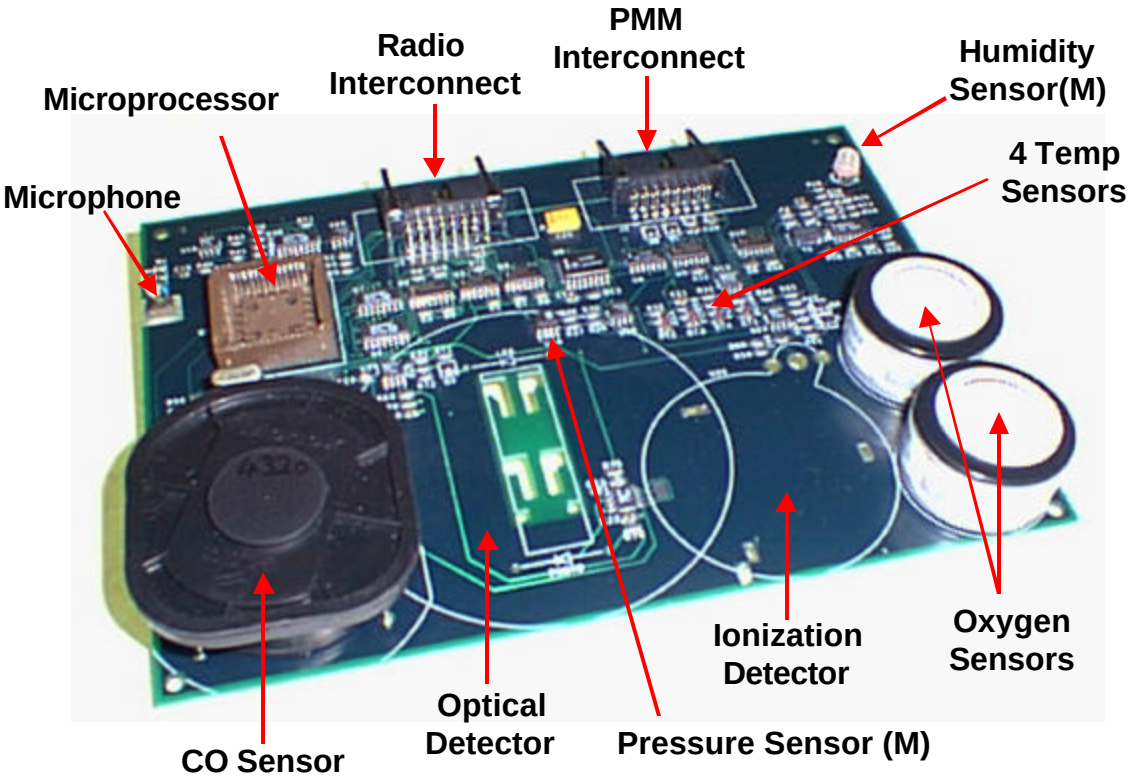

Figure 4 Breadboard Environmental Sensor Cluster

Further details on the low power architecture are covered in Section 4.1.2, RSVP Hardware.

3.4.2 Data/Information Fusion

3.4.2.1 Information Architecture

The manner in which RSVP information is distributed throughout given compartment is through a publish/subscribe paradigm. The basic methodology is people or processes subscribe to RSVP information, such as fire alarms. The compartment's APs are the publisher of fire alarm messages. The APs hold on the fire alarm subscription until it cancelled by the subscriber. No further information needs to be sent, once an AP determines an alarm the AP automatically knows who he needs to send it to by virtue of the subscription. This messaging approach minimizes LAN traffic. Figure 5 presents this approach graphically.

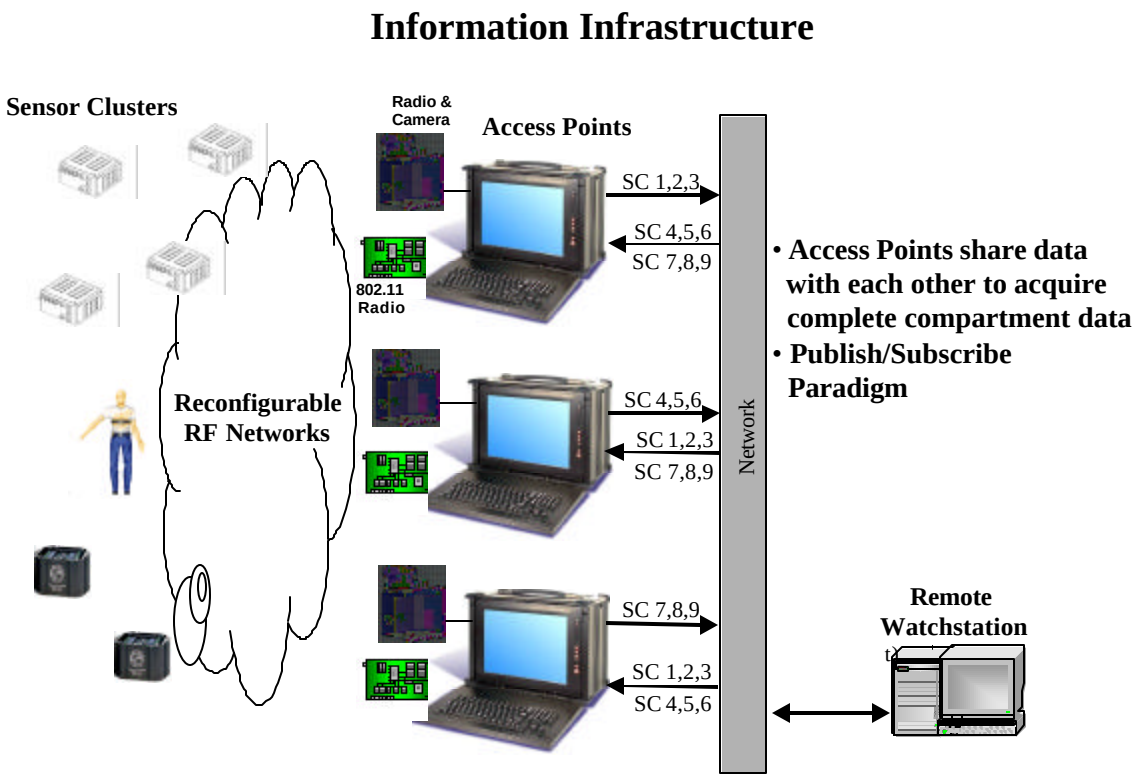

Figure 5 Information Infrastructure

3.4.2.2 Data Fusion

Understanding the different types of data fusion that are needed in a system like RSVP is very difficult. RSVP is intended to feed data/information to other systems and processes and some of the systems have not been developed yet. Figure 6 is a block diagram that describes the different levels of data fusion within the RSVP architecture. More detailed discussion concerning the data fusion can be found in the RSVP Systems Engineering Study and other related RSVP documents.

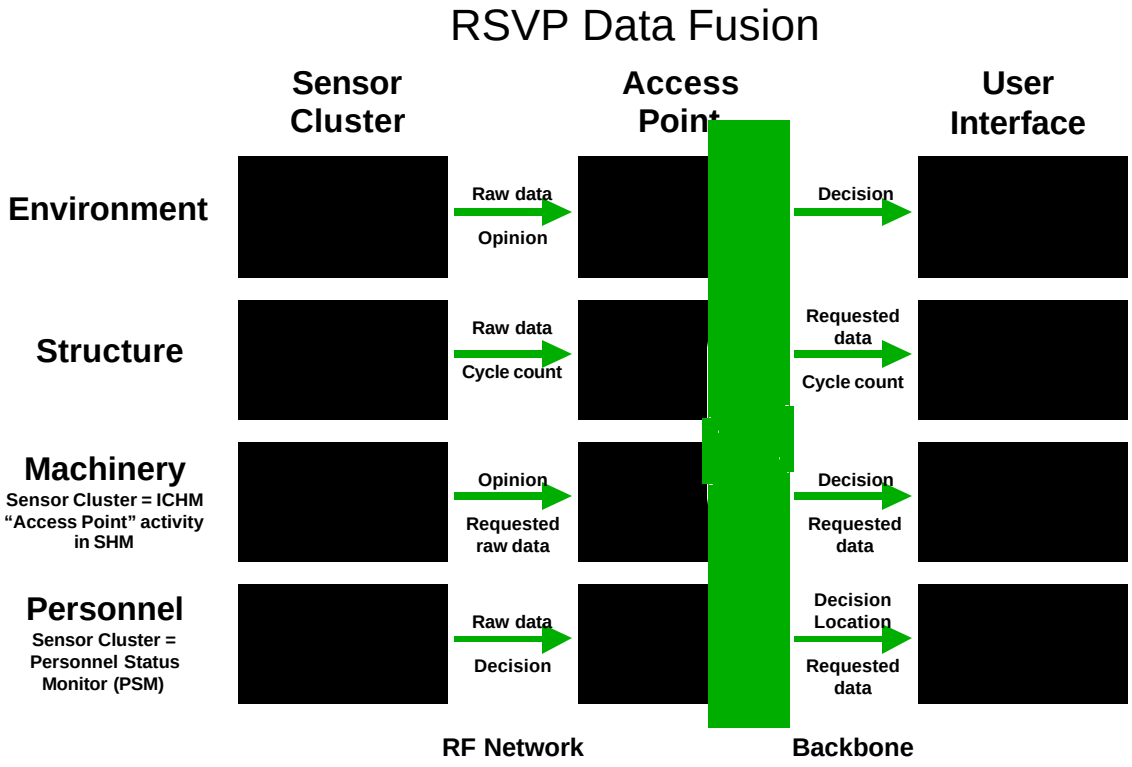

Figure 6 RSVP Data Fusion

3.4.3 Power Harvesting

The RSVP program has investigated three different power-harvesting methods for sensor cluster battery augmentation.

- Light-to-Electric (Photovoltaic)
- Thermo-to-Electric
- Vibration-to-Electric.

Various risk mitigation efforts were performed for these technology areas.

3.4.3.1 Light Energy Survey

The Oak Ridge National Laboratory (ORNL) performed an ambient light survey aboard the USS Supply (AOE 6), June 30, 1999. The purpose of the survey was to examine the internal light levels aboard a commissioned US Navy ship. The intended use is to convert the stray internal light to usable power to run various RSVP sensors. It was thought that the sensor array that would be used would draw about 1 mW power on average from various power sources within the sensor cluster.

The study concluded that there is not a sufficient light level in the measured compartments to supply all the power required by a sensor cluster. If the sensor cluster is to be placed in some of the darker compartments, Photovoltaics are not a realistic option for more than 5-10% of the present power requirements. For complete test procedures and results, please refer to the “Photovoltaic Measurements for RSVP Report” [ref 10].

3.4.3.2 Vibration Energy Survey

A Vibration and Temperature survey was performed aboard the USS MONTEREY (CG-61) 16-17 October 2000 (Figure 7 and Figure 8) This survey was performed to determine ambient thermal and vibration levels within MER#2. This data was then used to guide the power harvesting manufacturers to optimize their devices. The complete test results can be found in the "RSVP Power Harvesting Survey Report" [ref 11].

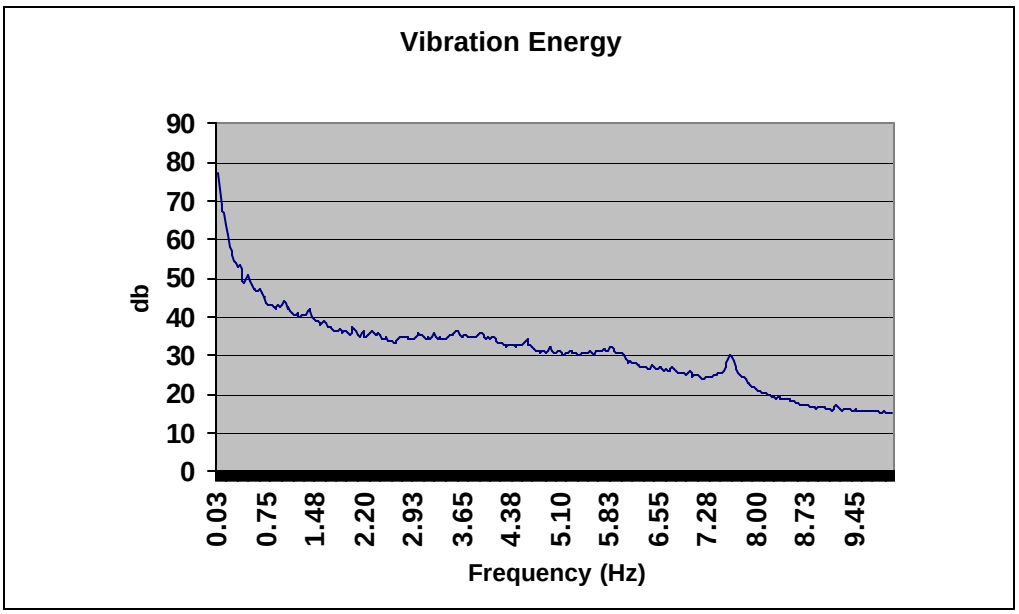

Figure 7 Average Vibration Levels in MER#1 aboard CG-61

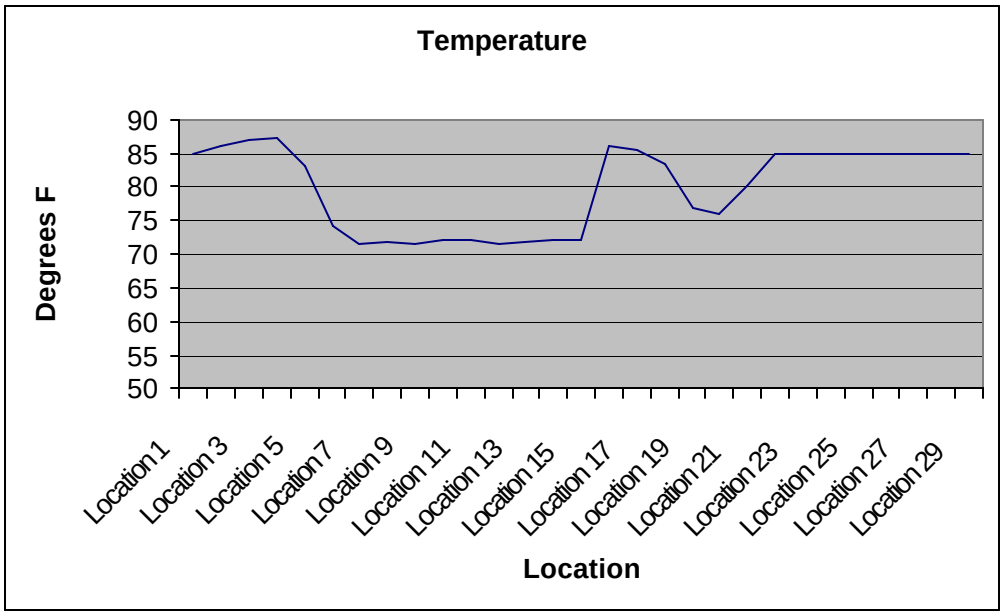

Figure 8 Average Temperatures in MER#1 aboard CG-61

4.0 Architecture

4.1 Environmental and Structural Sensor Cluster

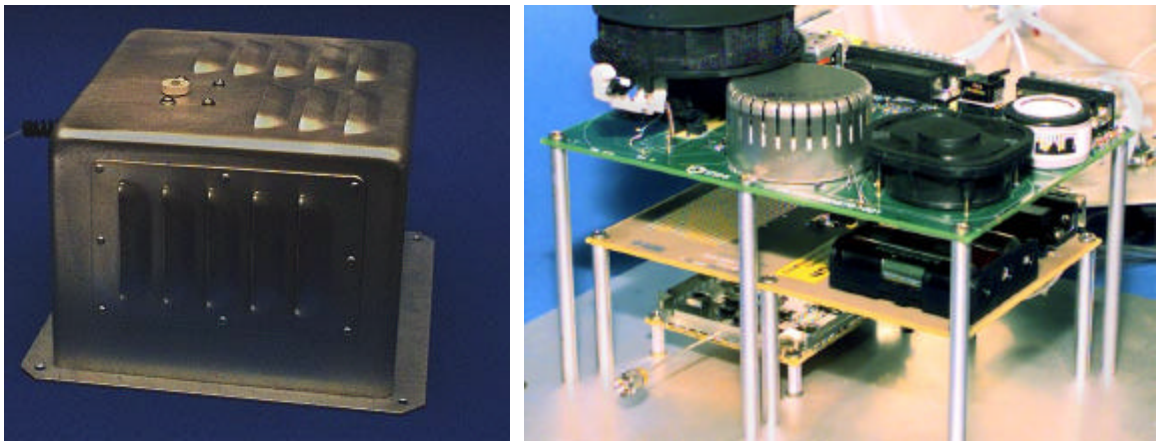

Figure 9 Environmental/Structural Cluster Final Implementation

4.1.1 Overview

This section describes the major electrical and functional characteristics of the RSVP Environmental Sensor Cluster and Structural Sensor Cluster (ESC and SSC) - Figure 9. The Environmental Sensor Cluster is designed to monitor a set of parameters to determine whether a fire or flooding condition exists in a ship compartment. Included are redundant temperature sensors, both photoelectric and ionization smoke sensors, and sensors that monitor carbon monoxide, oxygen, and humidity levels. A differential pressure sensor can measure flooding using an external probe. An external input is also available for a hatch-position indicator. The Structural Sensor Cluster provides external interfaces for two navigation accelerometers, a shock accelerometer, and two Sarcos strain sensors. The Structural Sensor Cluster samples these sensors periodically, and adjusts its sample rate as warranted by sea conditions. The shock sensor is only monitored in General Quarters mode to conserve power.

Data from both the Environmental and Structural Sensor Clusters are periodically transmitted to an Access Point (AP) in the compartment, which combines that data with data received from other clusters and forwards it on to a monitoring station. Alert conditions are also sent to the Access Point whenever a sensor reading exceeds a predetermined threshold. The Access Point can change thresholds and sample rates to select an optimum tradeoff between data granularity and power consumption.

The Environmental and the Structural Sensor Clusters share the same circuit board design. Portions of the circuit board are populated differently, a function of which cluster

is being assembled. A completed cluster assembly includes the environmental or structural circuit board, a power module containing a battery pack and regulators, and a radio module that provides the RF link to the Access Point.

4.1.2 RSVP Hardware

4.1.2.1 Microcontroller

Both Sensor Clusters use a Motorola 68HC705B16 Microcontroller, which was selected for its low power consumption, low cost, and suitability for the application. The HC05 family encompasses many versions, each targeted at a specific range of applications. The 68HC705B16 includes internal RAM for data storage, EPROM for the program, and non-volatile memory (EEPROM) for serial number, calibration coefficients, and alterable operational parameters. It includes an 8-bit A/D converter, which provides better than 1% resolution for analog sensor measurements. It also includes an asynchronous serial interface, which is used to pass data over the RF link. This same serial interface is multiplexed through external logic to communicate via a standard RS232 link to a laptop computer for test and calibration.

The major limitation of the HC05 family is that it is a simple 8-bit microcontroller, and contains only a single accumulator and an 8-bit index register. However, the 8-bit restriction only is a factor for the stress measurements and the environmental sensor digital filters, which are processed as 16-bit quantities. Another shortcoming of the HC05 family is that its onboard watchdog timer is only functional with the processor clock running. To achieve lowest power, the microcontroller must be put into the sleep mode whenever possible, wherein the processor clock is stopped. Because a robust system should have a watchdog timer, this function was duplicated external to the microcontroller for the sensor clusters.

4.1.2.1.1 Timebase

The time base used for RSVP is based on a 32-kHz quartz crystal. Its accuracy can be trimmed to better than .001%. Assuming synchronization with an Access Point every 100 seconds, timing accuracy should be better than one millisecond. For minimum power consumption, RSVP uses a micropower oscillator for the 32-kHz crystal, which drives a standard CMOS Motorola timer chip. The sensor cluster normally runs with a 1.00-second “heartbeat.” The timer can be adjusted in powers of two, from 0.25 second to 32 seconds. The longest time interval is used during extended sleep modes to minimize power consumption. The timer produces an interrupt to the processor at the specified time. During normal operation, this initiates a sensor scan, and perhaps a data transmission.

4.1.2.1.2 Sensors

The on-board sensors include temperature, smoke (photoelectric and ionization), carbon monoxide, oxygen, humidity, and ambient pressure. The Environmental Sensor Cluster also can monitor flooding and hatch closure through external connections.

4.1.2.1.2.1 Temperature

Temperature is a physical quality that can vary throughout a compartment, particularly if that compartment contains machinery. Monitoring temperature rise will give insight into the spread of fire. Early fire detection requires accurate monitoring of changes in the habitation temperature range. Tracking fire movement requires the ability to read very high temperatures. Multiple temperature sensors provide optimum performance in the selected ranges, and provide redundancy in measuring this critical parameter.
An active semiconductor temperature sensor with gain and bias adjustments provides high accuracy and resolution sufficient to be used for environmental controls (better than 1 degree F). To maximize resolution in this range, the habitation sensors will not track temperatures in excess of 100 degrees Centigrade.

A wide-range thermistor is included for catastrophe monitoring. Glass-encapsulated thermistors rated for operation to 300 degrees Centigrade are available from multiple sources. Because it is likely the sensor cluster itself will cease operation before that temperature is reached, the wide-range thermistor is mounted just inside one of the louvers to sample the air before the electronics is subjected to the extreme temperature. Accuracy of the wide-temperature range thermistor has been compromised to provide the wide range, but will be sufficient to track movement of a fire. Even thought an Environmental Sensor Cluster may only provide high temperature readings for a short time before it is destroyed, these readings may be of critical importance in an emergency. The original plan was to cross-correlate readings from the active linear temperature sensor, the wide-range thermistor, and a second thermistor optimized for operation in the habitation range. However, since thermistors are small, consume low power, and require little interface circuitry, three thermistors optimized for the habitation range are used to provide redundancy for the fire detection algorithm. While these are not as accurate as the active linear sensor over the entire range, their accuracy is sufficient for fire detection. A cross-correlation algorithm averages the three readings if they are similar, and does intelligent selection of the closest two, or mid-value select when the readings do not agree.

RSVP uses a 100-kΩ glass-bead thermistor produced by SeMitec. Three of these devices are configured to provide 1-degree-Centigrade accuracy over the habitation range of –20 C to +100 C. The same thermistor in a slightly different configuration provides the 0 C to +250 C range needed for the wide-range temperature sensor. While it could be calibrated for 10-degree accuracy over the full range, the single-point calibration used for RSVP should yield accuracy better than 25 C. The performance was not confirmed through high temperature testing. The wide-range thermistor is located just inside a louver to maximize the amount of time it will monitor an extreme temperature before the electronics becomes stressed to the point of failure.

This set of heterogeneous temperature sensors provides the optimum performance. The active semiconductor temperature sensor provides best accuracy throughout the habitation range. However, because it is mounted to the circuit board, it is slower than the thermistors to respond to changes. The triplex thermistor set provides a fast and reliable

readout for the fire detection algorithm. The wide-range thermistor adds the ability to track the movement of a hot fire that is beyond the range of the habitation sensors.

A multi-criteria fire detection algorithm was developed to cross-correlate readings from multiple sensors to provide a reliable means of detecting fire. It is possible to match temperature, smoke, and other parameters before issuing a fire alert. Using different sensors with different scale factors and operating characteristics should help eliminate false warnings that could be produced by common faults, such as a low supply voltage, A/D converter errors, or processing errors. The Access Point has full control in establishing the thresholds and determining which sensors will be included in the multi-criteria fire detection algorithm.

4.1.2.1.2.2 Smoke Detectors

While standard alarm integrated circuits exist for both photoelectric and ionization smoke detectors, the chambers that actually perform the sensing are not readily available. The RSVP Environmental Sensor Clusters use photoelectric and ionization smoke-detector chambers obtained from First Alert consumer fire alarms. Since the circuitry in consumer alarms is designed to operate from a 9-volt battery, it was not possible to use the available alarm integrated circuits for RSVP. These functions were duplicated with custom micropower analog circuitry, and use digital processing in the microcontroller. The photoelectric smoke detector works by measuring reflection of an infrared light source off smoke particles. To achieve sufficient operating life from a 9-volt battery, a typical home smoke alarm only pulses the infrared light source every 30 to 45 seconds. RSVP uses a higher sampling rate to achieve quicker response time. To keep energy consumption within an acceptable range, the pulse current is reduced to half the current typical in a home smoke detector, and the pulse width is also halved. The resulting signal at the photodetector is just above the noise floor, but an exponential digital filter effectively eliminates the noise. The photoelectric smoke detector is only sampled on those cycles when the data will be transmitted, as defined by the background transmit rate or the rapid transmit rate. When a fire alert is set, the photoelectric smoke detector is sampled once a second for maximum performance. The output of the infrared LED drive circuit is monitored to confirm the current drive remains in the correct range. This provides a means of confirming the infrared source is operating correctly when no smoke is being detected.

The ionization smoke detector measures the relative resistance of room air compared with air enclosed in a sealed chamber. Ionization reduces the effective resistance of the room air. This measurement requires a very high input-impedance amplifier due to the very low currents involved, and required careful layout to minimize leakage currents external to the sensing chamber. This circuit is powered continuously because the very low currents prevent it from stabilizing quickly enough for accurate readings if power were cycled.

4.1.2.1.2.3 Carbon Monoxide Level

Most carbon monoxide sensors are power-hungry devices. For that reason, many of the consumer carbon monoxide detectors have been designed to plug into a 120-VAC outlet. The carbon monoxide sensor selected for RSVP is a unit developed by CRL that is

appropriate for battery operation, and quotes a 5-year lifetime. Monox, Limited, a British firm, markets this unit. A typical sensing circuit is described in application data from Monox. This circuit was modified to operate from a 3-volt supply using micropower amplifiers. A monitor was provided on the control loop to confirm correct operation of the carbon monoxide cell if excessive carbon monoxide levels are indicated. Because it can take the carbon monoxide sensor many minutes after power is applied before it stabilizes with an accurate reading, the carbon monoxide sensor control loop is powered whenever power to the cluster is switched on. The microcontroller monitors the rate of change after turn-on, and outputs a default value until it has stabilized.

4.1.2.1.2.4 Oxygen Level

The oxygen sensor selected for RSVP is essentially a battery whose output voltage varies linearly with the percentage of oxygen in the atmosphere. One sensor has an operating life between one and two years. Provision has been made to employ two oxygen sensors, the second of which would be switched on when the first reaches its end of life. While the "cold sparing" was demonstrated in the prototype, the second cell location was not populated in the production units because of the short operational test for RSVP. Under normal operation, a low resistance is placed across the oxygen sensor, and the millivolt drop across that resistor is a measure of the percentage oxygen in the atmosphere. To maximize the operational life of the oxygen sensor cell, the load is only switched on when the Environmental Sensor Cluster has established communication with an Access Point. The load is removed whenever communication loss forces the Environmental Sensor Cluster into its sleep mode.

As with a normal flashlight battery, the oxygen sensor cell takes minutes to stabilize at a constant voltage output after it is switched on. Like with the carbon monoxide sensor, the microcontroller monitors the rate of change of the oxygen sensor after it is turned on, and outputs a default value until the cell has stabilized.

4.1.2.1.2.5 Humidity

Data indicates humidity can be a useful indicator when trying to determine the type of fire. The humidity sensor acts as a variable capacitor, and is used in a micropower oscillator circuit. Changes in humidity vary the capacitance, and the corresponding oscillator frequency. The oscillator is only switched during a sensor scan to conserve power. After the oscillator has stabilized, the period that it takes the oscillator to produce a fixed number of cycles is measured by the microcontroller. This period varies linearly with relative humidity. Because the nominal value of the humidity sensor can vary significantly, the number of cycles that are measured can be adjusted during calibration to provide the required resolution.

4.1.2.1.2.6 Ambient Pressure

A semiconductor ambient pressure sensor was included for RSVP to provide an indication of overpressure in a sealed compartment. The circuitry was designed to produce 1% accuracy and resolution, but we found that many of the sensors installed on the production Environmental Clusters did not meet their specifications. It is uncertain whether this was a lot problem with the sensors themselves, or whether it was due to

contamination getting into the sensing port during assembly. Because the pressure sensor is not an essential element of the Environmental Cluster, the degraded performance was accepted. A different pressure sensor from another manufacturer was used for the flooding measurement, and worked as expected on all units. That unit was physically different, and had input ports that protected it from contamination.

4.1.2.1.2.7 Flooding

Two types of flooding sensors were considered for RSVP. The first was a tank level sensor whose resistance varies with liquid level. An analog input was incorporated into the prototype Environmental Sensor Cluster board to read such a sensor. Later it was decided to use a differential pressure sensor to read flooding level, and this sensor was added to the production units. A plastic tube is brought out to connect to a sensor probe on those Environmental Clusters that are used to measure flooding level. The length of the plastic tube can affect the reading because the air in the tube compresses slightly as the water level rises. It is possible to obtain high accuracy by calibrating the flooding sensor with the actual sensing element. The gain is adjusted as required to accommodate the compression of the air in the tube.

4.1.2.1.2.8 Hatch Position

Hatch position can be read with either switches or an analog indicator. The analog input originally included for the flooding sensor is now used for the hatch position input. Assuming an analog sensor, this input has two thresholds to indicate when a door is fully open or fully closed. The electrical excitation signal to the sensor is only switched on when the readout is made to conserve energy.

4.1.2.1.2.9 Sensor Power Consumption

One major factor considered during the design of the RSVP electronics was power consumption. If all sensors were left on continuously they would be a major drain on energy resources. Only those sensors that do not stabilize quickly, such as the carbon monoxide sensor, are left on continuously. The control loops for these sensors use micropower operational amplifiers to minimize power consumption. All other sensors are only powered once a second for the short sensor scan interval. The photoelectric smoke detector is not normally sampled on every sensor scan because of its high-energy demands. It is only sampled prior to a scheduled background transmission unless it is tracking a smoke or fire event. The sensor scan is only performed when the Environmental Cluster is actively communicating with an Access Point to further conserve energy.

4.1.3 Operational Characteristics

4.1.3.1 Monitor Mode (Unlocked) Versus Acquisition Mode (Locked)

When the 68HC705B16 microcontroller is initially programmed, the EEPROM is normally unlocked and erased. When unlocked, its entire contents can be altered. The microcontroller has the ability to lock all but the first 32 bytes of EEPROM. All calibration constants and system operational constants that are not expected to be changed are stored in the upper portion of EEPROM that is locked when the sensor cluster is placed into the acquisition mode. Operational constants, such as alert thresholds and sample rates, are stored in the lower 32 bytes of EEPROM so the Access Point can modify them via the RF link while the sensor cluster is in operation. The state of the EEPROM determines whether the sensor cluster proceeds into the acquisition mode after power up, or whether it will remain in the configuration monitor.

When the microcontroller is initially programmed and the EEPROM is erased, the 32-bit serial number should be all 1s (FFFFFFFF in hexadecimal). Whenever the microcontroller powers up, it checks the status of the serial number stored in EEPROM. If the serial number is all 1s, the firmware will initialize the entire EEPROM to the default values stored in ROM. The EEPROM can be forced back to the default values after the sensor cluster has been in service by resetting the serial number to FFFFFFFF via the configuration monitor. (Note that this will overwrite any calibration data stored in EEPROM, and that data should be preserved first if the cluster was calibrated.) The default setting for the serial number is 52535650 in hexadecimal, which represents “RSVP” in ASCII. The serial number being set to “RSVP” indicates to the firmware that the sensor cluster EEPROM has been initialized, but the sensors have not been calibrated. As part of the calibration process, the actual device serial number is written into the EEPROM.

The monitor mode is entered following power up whenever the EEPROM is unlocked. In the monitor mode, the sensor cluster will communicate with a laptop or other PC via its RS232 link at 19.2K baud. With the RS232 connection in place, the monitor mode can be optionally entered when the EEPROM is locked by typing the “space” character within two seconds after power is switched on, followed by the string “RSVP” within 10 seconds. If the first character is not the “space” character, or if anything other than “RSVP” is subsequently received, the sensor cluster will immediately proceed into the acquisition mode, and will try to establish communication with an Access Point. While in the configuration monitor, the sensor cluster will respond to a list of commands that are useful for test and calibration of the sensors. Included are commands to lock and unlock the EEPROM. All commands for both Environmental and Structural Sensor Clusters are defined elsewhere in this document.

4.1.3.2 Acquisition Mode Network Management

RSVP communication uses synchronous transmission in assigned timeslots. The Access Point (AP) transmits a frame marker at the beginning of each one-second minor frame. The Sensor Clusters (SC) synchronize to the frame marker, and establish communication through a request and grant process.

When an SC powers up in a compartment, it must establish communication with an Access Point. It first listens on the PSM channel for transmissions from Access Points, and records the signal strength and channel number for any AP found. After listening and recording for one second, the SC sorts the list of channels by signal strength. If no APs were heard, the SC repeats the listen-and-record operation on the alternate PSM channel. If no AP is heard on either PSM channel, the SC automatically powers down and goes into a micropower sleep mode for a preset interval. The sleep interval is held in EEPROM, and can be programmed via the RS232 link.

Assuming at least one AP is heard, the SC switches to the channel of the strongest AP and listens for its periodic header. The periodic AP header is not only the timing reference for its channel, but it also contains a list of all other AP channels active in that compartment. After synchronizing with the header, the SC will transmit a slot request message, including its ID code. The SC will receive a slot assignment in the next AP header if it is accepted. The slot assignment is used by that SC for all further communication. The slot defines a time period relative to the start of the frame. If no slot assignment is received from that AP, the SC switches to the channel of the next strongest AP in the table, and repeats the process until the last AP in the table is tried. (Grounds for an AP to refuse an SC include a loading imbalance – too many SCs already on this AP and not enough on another AP in the compartment – and the AP thinking the SC is in a different compartment.) If still no slot assignment is received, the SC will go through the table once more, but this time issuing an emergency request. A “busy” AP is required to accept a SC issuing an emergency request, if at all possible.

When an SC receives a slot assignment from an AP, it resets its internal timebase to wake up just prior to that timeslot, and powers down. Exactly one second later the SC powers up, scans its sensors, and transmits its data. At its subsequent timeslots, the SC only transmits data if a threshold is exceeded, or if it is a regularly scheduled background transmission. The background and alert transmit rates can be adjusted by the AP. The SC will resynchronize with the AP once during each 100-second major frame, when the frame count matches its assigned slot number. To conserve power, this is the only time the SC receiver is powered to receive data transmitted by the AP. The SC transmits its diagnostic data following each resynchronization.

While it is not necessary for an SC to transmit data when nothing has changed, each cluster transmits at a low background rate so the AP can maintain a health status of each SC. If an SC has missed several expected background transmissions, it is likely to have lost communication. The cause may be as innocuous as a weak battery or a blocked RF

path, or it could signal something serious is happening in the compartment. In any case, loss of communication is worthy of investigation.

If an AP goes down, all SCs communicating with that AP must migrate to other APs. As with the initial search, the SCs will switch to other APs whose channel numbers are in their frequency table, beginning with the strongest. If the table contains no other APs, or communication cannot be established with any of the APs in the table, then an SC will repeat the initial search on the PSM channel. When an AP goes down, each SC will lose communication during re-sync relative to its slot assignment. As a result, all SCs migrate to other APs in an orderly manner. Slot requests are offset in the communication window as a function of the SC ID number. This will reduce the chance of SCs stepping on each other's transmission in the unlikely event that more than one SC requests a slot assignment in the same frame.

Occasionally the AP may have to modify system parameters in the SC. The AP sending the corresponding message to that SC during its synchronizing frame header accomplishes this. After correcting its timer, the SC will accept data contained in the message, and update its EEPROM as required. Because the SC may not synchronize on its first attempt, the AP may have to repeat the programming message for several frames after the earliest expected resynchronization frame. Receipt of the diagnostic message from that SC will confirm it has resynchronized and accepted the downlink. Modified parameters can also be automatically echoed back to the AP if this option is selected in the configuration flags stored in EEPROM.

4.1.3.3 Sensor Data Processing

All environmental sensors except the photoelectric smoke detector are sampled once a second after communication has been established with an AP. The photoelectric smoke detector is a power-hungry device because it requires pulsing an infrared LED to measure reflectivity off smoke particles. Battery life would be significantly reduced if it were pulsed once a second, and it is normally sampled only during the frame in which a transmission is scheduled. However, the photoelectric smoke detector is pulsed every second whenever a fire alert is recognized, because transmissions are made at that rate. The sensor sampling and processing proceeds in several stages. Initially all analog inputs are read by the microcontroller A/D converter as a burst and the raw data is saved in RAM. One of these measurements is an internal reference voltage. Since all A/D readings are ratio metric off the power supply voltage, the fixed reference voltage allows readings to be converted to an absolute voltage where required. For example, because the oxygen sensor generates a voltage corresponding to the percentage of oxygen in the atmosphere, its reading must be converted to an absolute voltage prior to calibration. Other readings, such as the linear temperature sensor and the thermistors are themselves ratiometric, and require no conversion after being sampled by the ratiometric A/D converter. After all sensors have been sampled, they are corrected for any variation in supply voltage, and are calibrated using the calibration coefficients stored in EEPROM. All but the thermistors use a linear scale factor and bias adjustment. Because the thermistors are nonlinear devices, the EEPROM data is a series of calibration points, and the calibration algorithm

interpolates the reading between these points. These points were calculated to minimize the peak error over the range. The calibrated data for most sensors is stored directly in the transmit buffer.

The fire detection algorithms monitor not only absolute limits, but also the rate of change of certain parameters. Both short-term and long-term exponential filters are maintained for most of the sensors. The short-term filters (1/8 new + 7/8 old) remove sample-to-sample random variations from readings prior to comparison with threshold limits. This is particularly important for the photoelectric smoke detector, which is noisy due to it operating at a low power level to conserve energy. The long-term filters (1/256 new + 255/256 old) provide a baseline to gauge the rate-of-change for the related readings. After the readings are calibrated and the digital filters are updated, the new readings are compared with both absolute and rate-of-change limits stored in EEPROM. Should any of these limits be exceeded, the corresponding status and alert bits are set. Whenever the threshold comparisons cause a status change, the present set of readings will be transmitted. Transmissions also occur at a more rapid rate when any of the rate-of-change limits are exceeded. Transmissions occur every second when a fire alert is issued. During a fire alert, energy conservation becomes secondary. It is more important to pass as much information as possible to the Access Point because the survival of the ship is at stake.

There is a multi-criteria selection for the fire alert bit. Two bytes in EEPROM have individual bits to AND each of the fire sensors into the algorithm. For example, if the ionization smoke detector and high temperature are selected, then both of these sensors must exceed their limits before the fire alert is set. Other thresholds in EEPROM determine whether the individual status bits are set for exceeding a fixed threshold or whether a high rate-of-change has been detected. Individual options in the multi-criteria bytes select either a high temperature limit or high temperature limit OR rapid temperature rise. This option was included to prevent false alerts when an Environmental Sensor Cluster is mounted just inside the doorway of an air-conditioned space. Opening the door could cause a rapid temperature rise, but that should not be a factor in determining a fire alert. However, a rapid temperature rise in a more benign location could give an early warning that a fire has started. The multi-criteria selection, fixed, and rate-of-change thresholds can all be changed via the Access Point to give maximum flexibility in establishing fire alert conditions.

4.1.4 Sensor Performance

While the intent was just to measure the sensors and output the resulting data, it was found during testing that several of the sensors needed additional processing. The carbon monoxide and oxygen sensors exhibited significant drift after initially being switched on. It could take these sensors many minutes to stabilize to an accurate reading. The pressure and flooding sensors stabilized more quickly but had their own set of problems. This section describes how the individual sensor characteristics were handled.
Literature from Monox indicates it could take a long time for that carbon monoxide sensor to stabilize after power is turned on. This was not seen during development because the emulator power came on with the computer, and the prototype was powered through the emulator link. Power to the carbon monoxide sensor remained on most of the time during code development. During testing, it was discovered the carbon monoxide sensor seemed to take a variable length of time to stabilize, depending on how long power was off. It would stabilize within minutes when power was removed for less than an hour, but would take much longer when power was off for an extended period. Because the erroneous values would corrupt the fire detection algorithms, code was developed to override the carbon monoxide data sensor until the sensor had stabilized. This code monitors its rate of change after power is switched on, and substitutes a default value until the rate of change decreases to near zero.

Another problem testing divulged about the carbon monoxide sensor was stabilization of the zero point. This sensor is capable of reading to 5000 parts per million. A 1% bias error can cause a 50 ppm erroneous positive reading. A carbon monoxide bias adjustment was added in the portion of EEPROM that can be updated by the Access Point so the carbon monoxide level can be zeroed if necessary during operation.
As described elsewhere, the oxygen sensor is essentially a battery. To maximize its operating life, the oxygen sensor is only switched on while the Environmental Sensor Cluster is communicating with an Access Point. Like an ordinary flashlight battery, the initial output from the oxygen sensor is high, and it takes several minutes before its output decreases to an accurate value. Code similar to that developed for the carbon monoxide sensor was added to override the oxygen readings until they have stabilized. The other factor to consider with the oxygen sensor is that its output will slowly decrease over its operating lifetime. It will require periodic calibration to maintain high accuracy. A scale factor adjustment was added in the portion of EEPROM that can be updated by the Access Point so the oxygen sensor can be readjusted to produce an accurate reading if necessary during its operation.

Long-term control loops to stabilize the carbon monoxide and oxygen readings were initially placed in the Environmental Sensor Cluster itself, but these loops could have masked slow changes in the environment. Since the Access Point has the bigger picture, and can correlate readings from other Environmental Clusters when adjusting these sensors, it was given the responsibility to maintain their long-term accuracy. The cluster only handles the period up until the carbon monoxide and oxygen sensors have achieved initial stabilization.

Both the ambient pressure sensor and the differential pressure sensor for flooding also have stabilization problems. Both produce an inaccurate initial reading when an Environmental Sensor Cluster first establishes communication with an Access Point and begins sending data. Because of this, their first readings are ignored and their digital filters are initialized after their readings have stabilized.

While testing showed the differential pressure sensor was an accurate flooding indicator, slight instability and hysteresis caused the zero-flood-level reading to drift slightly. This was certainly within the expected accuracy of the sensor, but the small errors with no flooding were disconcerting. A low-speed control loop was added to drive the zero level to exactly zero. A negative reading is clamped at zero. The control loop is inhibited if the flooding-sensor reading rises above 2 inches, or is increasing at a large rate. This control loop keeps the flooding readout actively zeroed unless an actual flooding condition is detected.

A similar control loop was considered for the ambient pressure sensor to drive it to standard atmospheric pressure at sea level, but the sensor used for this application did not perform as expected. While identical to the sensors used on the prototypes, most of the sensors installed on the production units had a scale factor below the acceptable range. Some had a scale factor too low to be calibrated. The units that could be calibrated required such a large scale-factor multiplication that their readings were unstable. Without further investigation, it is not know whether the problem was due to contamination getting into the sensing port during assembly, or whether there was a production lot problem from the manufacturer. The problem was not investigated further because these sensors were not an essential part of the sensor suite, and their disappointing performance would not compromise the overall system operation.

4.1.4.1 Power Considerations

Recognizing that it is essential for the environmental parameters to be measured, the next most important factor for the clusters is maximum operating life. While affected by operating modes and changes in the environment, the Environmental Sensor Cluster battery life can exceed 1 year. However, the high current demand for sensors now used for the Structural Sensor Cluster limits its battery life to several weeks. Again, this depends on the operating modes. Extended operation of the Structural Sensor Cluster in the General Quarters mode (with sensors on continuously) will drain the battery quickly. Both sensor clusters have the ability to monitor their battery condition, and maintenance personnel can be informed when replacement becomes necessary.

RSVP incorporated many of the micropower tricks learned during the IR&D RQS project. These included using a comparator in front of the CMOS input for an oscillator to insure the input voltage passes through the “high dissipation” transition region quickly. Power sequencing, sleep modes, adjustable clock rates, and high-value isolation resistors were all used to full advantage. Low supply voltage correlates with low power consumption. The HC05 family can operate down to 3.0 volts. Increasing the supply to 5.0 volts could double the microcontroller throughput and increase the accuracy of its

A/D converter, but the tripled power consumption was unacceptable. Another factor considered was the suite of sensors. Standard integrated circuits for consumer smoke and ionization alarms are designed to operate from a 9-volt battery. RSVP includes custom circuitry to duplicate the sensing functions of these devices while avoiding the higher supply voltage needed by the standard parts.

All sensor cluster circuitry was designed to operate from a single 3.3-volt supply. The Environmental Clusters run off a simple series pass regulator with primary power provided by three Eveready L91 AA lithium cells. The three L91s can provide over 10 watt-hours of total energy, or about 1-milliwatt average for a year. Reducing the background transmit duty cycle and extending the power-down sleep interval would extend operating life. Each of these intervals can be programmed via the RS232 serial link.

The Sarcos strain sensors and the shock and navigation sensors selected for RSVP need higher voltages. A high-efficiency switching regulator power supply was designed for the Structural Sensor Cluster to provide the higher voltages needed by its sensors. For maximum operating life, the switching regulators are only switched on during the sensor measurements.

4.1.5 Firmware Modules

This section describes the RSVP code modules. The descriptions for each module begin with the filename used for the Environmental Sensor Cluster code. Several modules, such as those relating to the RF link, are identical for the Structural Sensor Cluster. Those that have similar functions, but are not identical have the underscore "_" replaced with a dash "-" for the corresponding Structural Sensor Cluster code module.
RSVP_EOS / RSVP-SOS - Environmental / Structural Operating System: The Environmental and Structural Operating Systems are the code modules that are downloaded into the microcontroller EPROM. The source code for these modules provides the framework for all sensor cluster firmware. They include the power-on initialization, interrupt processing, overall system timing, utility functions, and several shared tables needed by other firmware modules. All other firmware modules are included in the firmware assembly by references in the operating system code modules. Detailed processing functions are performed by several of the firmware modules listed below.

RSVP_CON - Constant Assignments: This small module contains the I/O port definitions and internal register addresses for the 68HC705B16 microcontroller. While some of these assignments are fixed in the microcontroller itself, most define the electrical I/O interconnections to the sensor cluster board.

RSVP_RAM - RAM Assignments: This module defines all data held in the microcontroller random-access memory. Because many instructions only operate on data held in the first 256 bytes of the memory map, base-page RAM is very valuable. Many addresses in the base-page have multiple uses, depending on what code is running. For example, the array space used for the sound FFT is also used for the transmit and receive data buffers. Transient data parameters have unique names, and are mapped into temporary RAM locations that were selected to avoid conflicts while those parameters are active. The microcontroller stack also uses base-page RAM, and sufficient space must be left above the transient data to allow for the maximum number of subroutine calls. RAM assignments were a balancing act during program development, and several problems were traced to transient data being stepped on by the stack. Because base-page RAM is very limited, only critical parameters have unique base-page RAM assignments. The functions of all individual status flags are defined under each status data byte that holds that status flag. There are several different data messages, and the transmit buffer data organization is defined for each of the messages. To minimize RAM usage, calibrated sensor readings are stored directly into the transmit buffer wherever possible.

RSVP_EEP - EEPROM Assignments: The EEPROM contains all data that can be altered after the microcontroller is programmed. The lower portion, which cannot be locked, contains the system operational constants that can be changed by the Access Point. The upper region, which is lockable, contains calibration data for each of the sensors, and various other system constants that may be altered if necessary. These constants were originally fixed in ROM, but were moved to EEPROM to allow them to

be changed in the field without having to reprogram the microcontroller. All EEPROM data is initialized from ROM the first time the microcontroller is powered up after being programmed. The initial calibration values are necessary for the sensors to be "in the ballpark" before the actual calibration is done. All EEPROM data can be accessed and modified via an RS232 link to a laptop computer.

RSVP_CFG - Configuration Monitor: This module provides the means to interact with either the Environmental Cluster or the Structural Cluster via the 19.2K RS232 link to a laptop computer. It includes commands to test the electronics, calibrate the sensors, and alter any of the constants held in EEPROM. A section of this document details the operation of the Configuration Monitor for both kinds of Sensor Cluster.

RSVP_SYN - Synchronization: This module is certainly the most complex in the RSVP sensor cluster firmware. Whenever a sensor cluster is powered in the acquisition mode, it must establish communication with an Access Point to begin sending data. This routine establishes communication with an Access Point, and maintains synchronization as long as communication with that Access Point is feasible. When communication is lost, it tries to establish communication with another Access Point. Failing that, the Sensor Cluster will power down for a predetermined sleep interval before it attempts to reestablish communication. A further description on how the network is managed can be found elsewhere in this document.

The synchronization routine is organized as several interlocked loops that are called when communication must be established, or when resynchronization is necessary. The outer loop handles the overall search procedure. It orchestrates listening on the PSM channel and then on the AP channels. The actual search process is done by an inner loop that also handles the periodic resynchronization. Flags determine whether it is PSM-monitor operation, AP-monitor operation, or a periodic resynchronization. An Access Point header is identified as beginning with the "FF00FF" pattern with opposite parity. To maintain synchronization, the interval timer is reset immediately after an Access Point header is received. Any data contained in the message is processed and responded to after the timing reference has been established.

The list of other Access Points within the compartment that is contained in an Access Point message is used to maintain the Sensor Cluster's frequency table. The received signal strength of Access Points found during the PSM search, but not indicated as being active in the compartment, is decremented at each resynchronization. These superfluous Access Points are purged from the cluster's frequency table individually as their signal amplitudes decrease to zero. Eventually only Access Points active in that compartment are in the cluster's frequency table, sorted by received signal strength. Access Points active in the compartment that were not found during the PSM-channel monitor operation are added to the bottom of the Sensor Cluster's frequency table. When communication is lost, the table is used to re-establish communication with another Access Point quickly without having to repeat the power-hungry PSM-channel monitor operation.

RSVP_ADC - A/D Conversion: This module performs the sensor scan and calibrates the measurements based on calibration coefficients stored in the EEPROM. It also maintains several digital filters used to track the rate of change of certain characteristics of the environment. This process proceeds in several stages. First, sensor power is applied, and sensors are scanned. The photoelectric detector is only switched on during a fire alert or if a transmission is scheduled to conserve power. Using the voltage reference measurement, a correction factor is calculated for those readings that must be converted to absolute values, and those readings are adjusted. Then all sensor readings are calibrated using scale-factor and bias numbers stored in EEPROM. The thermistor readings are processed differently because thermistors are not linear devices. The EEPROM contains a sequence of calibration points for each thermistor, and these readings are calibrated by interpolating between the calibration points. As each of the sensors is calibrated, short- and long-term exponential digital filters are updated with the new data. The short-term filter removes sample-to-sample randomness from the readings. The long-term filter establishes a baseline to gauge rate of change. As the readings are calibrated, they are stored in the transmit buffer to prepare for the next transmission.

RSVP_CHK - Check Thresholds: This module compares all sensor readings against limits contained in EEPROM, and sets status and alert flags for those readings that exceed their limits. This routine also performs redundancy management for the triplex habitation thermistor set. When readings are within 2 degrees Centigrade, an average reading is calculated. Averaging of the closest two, or mid-value select is performed as appropriate when the readings disagree by more than 2 degrees Centigrade.
This routine checks thresholds for both absolute limits, and rate of change limits. Status flags are set whenever a threshold is exceeded. A fire alert can be issued, depending on which sensors were selected for the multi-criteria fire alert. This routine also maintains the status bits that determine sample rate. Whenever a status bit changes, it schedules immediate transmission of that fact. Hysteresis is used on all status bits to prevent wasteful transmissions when a reading sits right at a threshold.

RSVP_SND - Sound Event Processing: This module contains subroutines to sample the audio channel and process the resulting data. The microphone is sampled 64 equally-spaced times over a 10-millisecond interval. The maximum and average peak-to-peak values of the input waveform are calculated for readout and automatic gain control. If the amplitude of the event is large enough, a 32-point FFT is calculated and stored in the transmit buffer for later transmission to the Access Point. For best resolution, the FFT power data is normalized, and the scaling information is included in the sound event message.

RSVP_RF - RF Control: This module sets the RF frequency synthesizer to the selected channel. There are 142 channels. The channel number is used as an index into the frequency tables. Different tables are used for transmit and receive frequency settings to allow the offset for the IF amplifier in the receiver. The frequency data is “bit banged” out to the synthesizer through several I/O lines to set the frequency. A short delay allows the synthesizer to stabilize before the receiver or transmitter is switched on.

RSVP_MSG - Receive Message Processing: This module processes any commands received from the Access Point. The messages are either requests for data or contain data to programmed into the EEPROM. A table near the end of RSVP_EOS defines the recognized messages, their lengths, and whether they will be accepted in broadcast mode. The Environmental Sensor Cluster accepts the following message types from the AP:

- 40_{16} Sync Reference – standard AP header that contains only the frequency table
- 41_{16} Slot Assignment – byte 16 = slot #
- 42_{16} Data Request – byte 16 = type of data requested (broadcast mode accepted)
- 43_{16} Set Threshold Byte – used to change a single parameter in EEPROM
- 44_{16} Multi-byte Downlink – used to change a block of data in EEPROM
- 45_{16} Kickoff – causes the cluster to migrate to another AP (broadcast mode accepted)

RSVP_XMT - Transmit Data: This module transmits all possible data messages. The Transmit subroutine starts by filling the transmit buffer with the any data required for that particular message type, and then calls the shared Transmit Data subroutine to output the data from the transmit buffer to the radio. All transmitted messages begin with a fixed FF00FF header pattern for message synchronization. 55FF was added in front of this standard header pattern to help the radio lock to the message. This routine is also used to output data in ASCII format for testing and calibration while running the Configuration Monitor.

RSVP_TBL - CRC Table: This module contains data used by the Transmit Data subroutine to calculate the 16-bit cyclic redundancy check characters added to the end of a message.

RSVP_FRQ - Frequency Tables: This module contains the bit patterns that are sent to the frequency synthesizer for each channel number.

RSVP_STR - Strain Sensor Code: This module contains code to sample the Sarcos strain sensors. It first sends a pattern of pulses to the Sarcos sensors to cause them to make a reading, as defined in the Sarcos data. It then reads the data from both sensors over their serial interface. Each data bit is center sampled for maximum noise rejection.

4.1.6 Environmental Cluster Configuration Monitor

A simple interactive monitor offers test modes useful for calibration, and allows calibration coefficients and system constants to be altered. The monitor is automatically entered at power-up when the EEPROM is unlocked. At a minimum, the Sensor Cluster serial number must be entered, and the protected portion of the EEPROM locked. After the EEPROM is locked, it is still possible to for the Sensor Cluster to enter the monitor. When power is cycled, the Sensor Cluster will issue the prompt "RSVP" over its serial port at 19.2K baud with the radio off. If the Sensor Cluster receives a space character within 2 seconds of the prompt, and "RSVP" within the next 10 seconds, then it will enter the monitor mode. If anything other than the space character is received within the first two seconds, or anything other than "RSVP" is received within the next 10 seconds, the Sensor Cluster transmits "END" and enters its operational mode. The Sensor Cluster does not check for entry into the monitor mode again unless power is removed for several seconds.

The following commands are available in monitor mode:

?	Sensor Query – outputs standard environmental message data in ASCII format
&	Diagnostic Query – outputs the diagnostic message data in ASCII format
!	Monitor the sound channel – outputs sound event message data in ASCII format (hit a key to exit)
^	Turn sensor power ON
_	Turn sensor power OFF
>	Increase microphone input analog gain (7 is maximum)
<	Decrease microphone input analog gain (0 is minimum)
{	Switch Ionization sensor test mode ON (useful during calibration)
}	Switch Ionization sensor test mode OFF (useful during calibration)
~	Read and display Sarcos strain sensors (only useful for testing the Sarcos data interface)
Q	Query selected sensor while EEPROM calibration data is displayed
Ctrl C	Carbon monoxide test – generates simulated CO for 10 seconds & displays raw readings
Ctrl I	Ionization smoke sensor test – pulses test input, displays raw & calibrated readings (off…on…off)
Ctrl R	Reset all sensor short-term and long-term digital filters
Ctrl S	Scan sensors and output uncalibrated readings contained in the A/D buffer
Ctrl L	Lock EEPROM
Ctrl U	Unlock EEPROM (requires "Y" acknowledgement before the unlock is performed)
Ctrl Z	Exit Monitor (also insures EEPROM is locked)

Calibration data in locked EEPROM may be entered or modified using the following commands:

#	4-byte factory serial number	
@	PSM channel assignments (default are 1 and 81)	
1	thermistor #1 (7-byte calibration table)	"Q" reads raw & calibrated temperature
2	thermistor #2 (7-byte calibration table)	"Q" reads raw & calibrated temperature
3	thermistor #3 (7-byte calibration table)	"Q" reads raw & calibrated temperature
C	carbon monoxide (scale factor and bias)	"Q" reads raw & calibrated CO level
F	flooding sensor (scale factor and bias)	"Q" reads raw & calibrated flooding level
H	humidity sensor (scale factor and bias)	"Q" reads raw & calibrated humidity
I	ionization smoke detector (scale factor and bias)	"Q" reads raw & calibrated smoke level
L	6 bytes for physical location parameters (optional)	
O	oxygen sensor (scale factor and bias for each)	"Q" reads raw & calibrated oxygen for each
P	pressure sensor (scale factor and bias)	"Q" reads raw & calibrated pressure
S	photoelectric smoke detector (scale factor and bias)	"Q" reads raw & calibrated smoke level

T	linear temperature sensor (scale factor and bias)	"Q" reads raw & calibrated temperature
W	wide range thermistor (7-byte calibration table)	"Q" reads raw & calibrated temperature
K	provides access to all system constants that can be modified	

Thresholds and operational parameters in unlocked EEPROM may be entered or modified using the following commands:

+	configuration flags (selects which oxygen sensors are enabled)
$	oxygen sensor scale-factor adjustment and carbon monoxide bias adjustment
%	threshold limits for all sensors
M	multi-criteria fire selection bytes (logic 1 selects AND into fire alert)
X	transmit parameters (time between scheduled & high-rate transmissions)
Z	sleep interval after AP search fails in 32-second increments

Only the thresholds and operational parameters can be modified via the AP.

EEPROM data is entered via hexadecimal characters. Data can be edited using TAB to skip fields, and BACKSPACE to correct entries. Editing the displayed set of EEPROM parameters is terminated with the ENTER key. The data displayed is written to EEPROM at that time. Only valid hexadecimal characters will be accepted with one exception. If "Q" is entered immediately after sensor calibration data is displayed (with cursor still at the beginning of the line), that sensor will be sampled and the raw and calibrated readings for it will be displayed. This function is useful during test and calibration of the sensors.

4.1.6.1 Uncalibrated Dump of A/D buffer with Ctrl "S" Command

XX	2X Vref A/D reading
XX	sound input (single reading not useful)
XX	ionization smoke detector A/D reading
XX	photoelectric smoke detector A/D reading
XX	carbon monoxide detector A/D reading
XX	linear temperature sensor A/D reading
XX	habitation thermistor #1 A/D reading
XX	wide-range thermistor A/D reading
XX	oxygen sensor #1 A/D reading
XX	oxygen sensor #2 A/D reading
XX	absolute pressure sensor A/D reading
XX	flooding differential pressure sensor A/D reading
XX	hatch status input A/D reading
XX	scaled battery voltage 2 A/D reading
XX	radio signal strength indicator A/D reading
XX	scaled battery voltage 1 A/D reading
XX	habitation thermistor #2 A/D reading
XX	habitation thermistor #3 A/D reading
XX	sensor 1 power A/D reading
XX	sensor 2 power A/D reading
XX	photoelectric LED drive level A/D reading
XX	carbon monoxide counter control loop A/D reading

4.1.6.2 Environmental Cluster Standard Data Message

32	Message Type for Standard Data Message	
XX	LS Byte of 32-bit cluster ID number	
XX	Alert Status byte	
	bit 7 (80_{16}) = fire alert	
	bit 6 (40_{16}) = flooding alert	
	bit 5 (20_{16}) = high temperature or rapid increase alert	
	bit 4 (10_{16}) = high carbon monoxide or rapid increase alert	
	bit 3 (08_{16}) = pressure indicator alert	
	bit 2 (04_{16}) = open hatch status alert (1 for > open threshold)	
	bit 1 (02_{16}) = closed hatch status alert (1 for < closed threshold)	
	bit 0 (01_{16}) = low primary battery alert	
XX	Health Status byte	
	bit 7 (80_{16}) = low/high power supply voltage	
	bit 6 (40_{16}) = habitation thermistor discrepancy	
	bit 5 (20_{16}) = linear temperature above high threshold	
	bit 4 (10_{16}) = linear temperature below low threshold	
	bit 3 (08_{16}) = RF signal strength below low threshold	
	bits 2,1,0 = sound/vibration input gain	
XX	Multi-Criterion fire status bits	
	bit 7 (80_{16}) = photoelectric smoke detector level OR rapid increase	
	bit 6 (40_{16}) = ionization smoke detector level OR rapid change	
	bit 5 (20_{16}) = high temperature OR rapid increase in temperature	
	bit 4 (10_{16}) = high temperature reading (no rate of increase check)	
	bit 3 (08_{16}) = high carbon monoxide level OR rapid increase	
	bit 2 (04_{16}) = low oxygen level OR rapid decrease	
	bit 1 (02_{16}) = high humidity level OR rapid increase	
	bit 0 (01_{16}) = rapid change on any fire sensor	
XX	Diagnostic status bits	
	bit 7 (80_{16}) = O2 sensor 2 is selected (0 for O2 sensor 1)	
	bit 6 (40_{16}) = secondary battery below threshold	
	bit 5 (20_{16}) = photodetector LED drive error	
	bit 4 (10_{16}) = CO detector counter loop saturation	
	bit 3 (08_{16}) = sensor power low voltage	
	bit 2 (04_{16}) = sensor 1 on low voltage	
	bits 1,0 = thermistor discrepancy: 11=#3 bad, 10=#2 bad, 01=#1 bad, 00=All OK	
XX	Battery Input 1 (from PMM)	V = 3.3 x (reading / 128)
XX	Linear Temp Sensor Level	deg C = (reading - 40) / 2
XX	Habitation Temperature Voted Sum	deg C = (reading - 40) / 2
XX	Habitation Temperature 256-second average	deg C = (reading - 40) / 2
XX	Wide Range Temp Sensor reading	deg C = 2 x reading
XX	Humidity Sensor 8-second average	% relative humidity = (reading – 50)
XX	Carbon Monoxide Sensor 8-second average	CO ppm = 5 x (reading - 10)
XX	Selected Oxygen Sensor 8-second average	Oxygen % = reading / 10
XX	Ionization Smoke Detector Level	nominal = 200, test = 100
XX	Photodetector Smoke Detector 8-sample average	nominal = 50, test = 100
XX	Flooding Indicator	depth inches = (reading -10) / 4
XX	Pressure Sensor Level	PSI = reading / 5
XX	RSSI (received signal strength indicator)	V = 3.3 x (reading / 256)
XX	Present Sound Signal Level (not valid in monitor)	relative level (varies with AGC)
XX	Average Sound Signal Level (not valid in monitor)	relative level (varies with AGC)
XXXX	16-bit CRC	
CRLF	(Appended only in Monitor Mode)	

4.1.6.3 Environmental Cluster Sound Event Message

33 Message Type for Sound Event

XX LS Byte of 32-bit cluster ID number
XX Alert Status byte
bit 7 (80_{16}) = fire alert
bit 6 (40_{16}) = flooding alert
bit 5 (20_{16}) = high temperature or rapid increase alert
bit 4 (10_{16}) = high carbon monoxide or rapid increase alert
bit 3 (08_{16}) = pressure indicator alert
bit 2 (04_{16}) = open hatch status alert (1 for > open threshold)
bit 1 (02_{16}) = closed hatch status alert (1 for < closed threshold)
bit 0 (01_{16}) = low primary battery alert
NOTE: The alert status byte reads 00H while in the configuration monitor test mode
XX Health Status byte
bit 7 (80_{16}) = low/high power supply voltage
bit 6 (40_{16}) = habitation thermistor discrepancy
bit 5 (20_{16}) = linear temperature above high threshold
bit 4 (10_{16}) = linear temperature below low threshold
bit 3 (08_{16}) = RF signal strength below low threshold
bits 2,1,0 = sound/vibration input gain
NOTE: Only the input gain is valid while in the configuration monitor test mode
XX Sound/vibration peak-to-peak amplitude
XX Sound/vibration running average
XX FFT scale factor adjustment
XX Bin number of strongest FFT component
XX Amplitude of strongest FFT component
XX Bin number of 2nd strongest FFT component
XX Amplitude of 2nd strongest FFT component
XX 32 Hexadecimal characters string indicating FFT bin amplitude 0-F
XX (there are no spaces between these ASCII characters in the monitor mode)
XX
XX
XX
XX
XX
XX
XX
XX
XX
XX
XX
XX
XX
XXXX 16-bit CRC
CRLF (Appended only in Monitor Mode)

4.1.6.4 Environmental Cluster Diagnostic Message

34 Message Type for Diagnostic Data

XX	LS Byte of 32-bit cluster ID number	
XX	Alert Status byte	
	bit 7 (80_{16}) = fire alert	
	bit 6 (40_{16}) = flooding alert	
	bit 5 (20_{16}) = high temperature or rapid increase alert	
	bit 4 (10_{16}) = high carbon monoxide or rapid increase alert	
	bit 3 (08_{16}) = pressure indicator alert	
	bit 2 (04_{16}) = open hatch status alert (1 for > open threshold)	
	bit 1 (02_{16}) = closed hatch status alert (1 for < closed threshold)	
	bit 0 (01_{16}) = low primary battery alert	
XX	Health Status byte	
	bit 7 (80_{16}) = low/high power supply voltage	
	bit 6 (40_{16}) = habitation thermistor discrepancy	
	bit 5 (20_{16}) = linear temperature above high threshold	
	bit 4 (10_{16}) = linear temperature below low threshold	
	bit 3 (08_{16}) = RF signal strength below low threshold	
	bits 2,1,0 = sound/vibration input gain	
XX	2X Comparator 1.182 volt reference (uncorrected)	(used to calculate actual Vcc)
XX	Diagnostic status bits	
	bit 7 (80_{16}) = O2 sensor 2 is selected (0 for O2 sensor 1)	
	bit 6 (40_{16}) = secondary battery below threshold	
	bit 5 (20_{16}) = photodetector LED drive error	
	bit 4 (10_{16}) = CO detector counter loop saturation	
	bit 3 (08_{16}) = sensor power low voltage	
	bit 2 (04_{16}) = sensor 1 on low voltage	
	bits 1,0 = thermistor discrepancy: 11=#3 bad, 10=#2 bad, 01=#1 bad, 00=All OK	
XX	PMM Battery input 2 adjusted reading	V = 3.3 x (reading / 128)
XX	Habitation thermistor 1 calibrated reading	deg C = (reading - 40) / 2
XX	Habitation thermistor 2 calibrated reading	deg C = (reading - 40) / 2
XX	Habitation thermistor 3 calibrated reading	deg C = (reading - 40) / 2
XX	Photodetector LED source level	V = 3.3 x (reading / 256)
XX	Humidity sensor 256-second running average	% relative humidity = reading - 50
XX	Carbon Monoxide Sensor 256-second average	CO ppm = 5 x (reading - 10)
XX	Selected Oxygen Sensor 256-second average	Oxygen % = reading / 10
XX	Ionization Smoke Detector 256-second average	nominal = 200, test = 100
XX	Photodetector Smoke Detector 256-second average	nominal = 50, test = 100
XX	Oxygen sensor 1 calibrated reading	Oxygen % = reading / 10
XX	Oxygen sensor 2 calibrated reading	Oxygen % = reading / 10
XX	Hatch status (external input)	V = 3.3 x (reading / 256)
XX	Sensor power 1 “ON” voltage	V = 3.3 x (reading / 256)
XX	Switched sensor power “ON” voltage	V = 3.3 x (reading / 256)
XX	Sync quality status	unitless quantity
XX	Oscillator start-up delay	time = reading x 138 μs
XXXX	16-bit CRC	
CRLF	(Appended only in Monitor Mode)	

4.1.6.5 Environmental Cluster EEPROM Calibration Data

NOTE: The first 31 bytes cannot be locked, and can be modified by the AP

4.1.6.5.1 Environmental Cluster Control (Modifiable By The AP)

Address	Access	Parameter (default values are in hexadecimal)
	+	Configuration Flags
0101		First byte of configurations flags
		bit 7 (80_{16}) = enable respond to data request in any BOD
		bit 6 (40_{16}) = set humidity flag if high/low (1/0)
		bits 5,4,3 select sound AGC level (100 = mid range)
		bit 2 (04_{16}) = select oxygen sensor #2 for output (0=#1)
		bit 1 (02_{16}) = enable oxygen sensor #2
		bit 0 (01_{16}) = enable oxygen sensor #1
		default = 21_{16}: AGC mid-range, oxygen #1 enabled
0102		Second byte of configurations flags
		bit 7 (80_{16}) = transmit diagnostic message @ every re-sync
		bit 6 (40_{16}) = inhibit sound level interrupt
		all other bits not used
		default = 80_{16}: diagnostic transmit enabled
0103	Z	Sleep interval if AP search fails (N x 32 sec)
		default = 02_{16}: 64 seconds
	X	Transmit parameters
0104		Number of seconds between scheduled transmissions
		default = $0A_{16}$: 10 seconds (range is 5 to 50)
0105		Number of seconds between fast transmissions
		default = 02_{16}: 2 seconds (range is 1 to scheduled transmit rate)
	$	Calibration adjustments – allows the AP to adjust a drifting sensor
0106		Oxygen sensor scale-factor adjustment
		default = 80_{16}: gain X 1.0 (X = N/128)
0107		Carbon monoxide bias adjustment
		default = 80_{16}: zero bias (128 +/- N in 5 ppm steps)

4.1.6.5.2 Environmental Cluster Alert Thresholds (Modifiable By The AP)

Address	Access	Parameter (default values are in hexadecimal)
	M	Multi-criteria fire selection bits
0108		FIRE ALERT multi-criterion selection #1 bit 7 (80_{16}) = AND photoelectric smoke into fire alert bit 6 (40_{16}) = AND ionization smoke into fire alert bit 5 (20_{16}) = AND high temp OR rapid rise into fire alert bit 4 (10_{16}) = AND high temperature into fire alert bit 3 (08_{16}) = AND high carbon monoxide into fire alert bit 2 (04_{16}) = AND low oxygen reading into fire alert bit 1 (02_{16}) = AND high humidity into fire alert bit 0 (01_{16}) = not used default = 60_{16}: ionization AND fast temperature rise
0109		FIRE ALERT multi-criterion selection #2 bit 7 (80_{16}) = AND photoelectric smoke into fire alert bit 6 (40_{16}) = AND ionization smoke into fire alert bit 5 (20_{16}) = AND high temp OR rapid rise into fire alert bit 4 (10_{16}) = AND high temperature into fire alert bit 3 (08_{16}) = AND high carbon monoxide into fire alert bit 2 (04_{16}) = AND low oxygen reading into fire alert bit 1 (02_{16}) = AND high humidity into fire alert bit 0 (01_{16}) = not used default = $C0_{16}$: ionization AND photoelectric smoke detectors
	%	Threshold parameters
010A		Linear temperature sensor low threshold default = $3C_{16}$: 10 degrees C (# = 40 + 2*C)
010B		Linear temperature sensor high threshold default = 78_{16}: 40 degrees C (# = 40 + 2*C)
010C		Habitation thermistors high ALERT threshold default = 78_{16}: 40 degrees C (# = 40 + 2*C)
010D		Habitation rate of increase ALERT threshold (change over 4 minutes) default = 06_{16}: +3 degrees increase above average (# = 2*C)
010E		Photoelectric smoke detector high ALERT threshold default = $4B_{16}$: 75 mid range (nominal = 50, test = 100)
010F		Photoelectric smoke detector rate ALERT threshold (change over 4 minutes) default = 05_{16}: 10% change (# = % of test range/10)
0110		Ionization smoke detector low ALERT threshold (inverse) default = 96_{16}: 150 mid-range (nominal = 200, test = 100)
0111		Ionization smoke detector rate ALERT threshold (change over 4 minutes) default = $0A_{16}$: 10% change (# = % of test range)
0112		Carbon monoxide high ALERT threshold (FE for no ALERT) default = 10_{16}: 30 ppm (# = 10 + 5*ppm)
0113		Carbon monoxide rate ALERT threshold (FE for no ALERT) default = 03_{16}: 15 ppm increase above average (# = 5*ppm)
0114		Oxygen sensor low ALERT threshold (01 for no ALERT) default = BE_{16}: 19% (# = 10*O2%)
0115		Oxygen sensor rate of decrease ALERT threshold (change over 4 minutes) default = 04_{16}: 0.4% below average (# = 10*O2%)
0116		Humidity sensor high/low ALERT threshold default = 46_{16}: 20% (# = %H + 50)
0117		Humidity sensor rate of change ALERT threshold (change over 4 minutes) default = 04_{16}: 4% change from average (# = %H)

0118	Flooding sensor high ALERT threshold (FE for no ALERT) default = $1A_{16}$: 4 inches (# = 10 + 4*inches)
0119	Flooding sensor rate of increase threshold (change over 4 minutes) default = 04_{16}: 1 inch above average (# = 4*inches)
011A	Pressure sensor high ALERT threshold (FE for no ALERT) default = 50_{16}: 16 psi (# = 5*psi)
011B	Hatch open ALERT threshold (FE for no ALERT) default = FE_{16}: disabled (# = 2.55 * %V @ open)
011C	Hatch closed & locked ALERT threshold (01 for no ALERT) default = 01_{16}: disabled (# = 2.55 * %V @ locked)
011D	Battery #1 low ALERT threshold (01 for no ALERT) default = 98_{16}: 3.9V (# = 39*V)
011E	Battery #2 low threshold (01 to disable) default = 01_{16}: disabled (# = 39*V)
011F	RF signal strength low threshold default = 80_{16}: half scale (# = 77*V)

4.1.6.5.3 Environmental Cluster Locked Calibration Coefficients

Address	Access	Parameter (default values are in hexadecimal)
0120	#	Sensor Cluster 4-byte serial number default = 52535650_{16} before actual cluster S/N is programmed
0124	L	Sensor Cluster 6-byte physical location reference default = all bytes cleared (not used)
012A	@	PSM channel numbers – can be changed if required due to interference default = 01_{16}, 51_{16}: Primary PSM #1, Secondary PSM #81
012C	T	Linear temperature sensor calibration scale factor & bias default = 76_{16}, 15_{16}: (gain X 0.92, +21 bias) 0C=.25V, 100C=3.05V
012E	1	Habitation thermistor #1 7-byte calibration table default = $0E_{16}$, 23_{16}, 49_{16}, $7A_{16}$, $A6_{16}$, $C7_{16}$, DD_{16}
0135	2	Habitation thermistor #2 7-byte calibration table default = $0E_{16}$, 23_{16}, 49_{16}, $7A_{16}$, $A6_{16}$, $C7_{16}$, DD_{16}
013C	3	Habitation thermistor #2 7-byte calibration table default = $0E_{16}$, 23_{16}, 49_{16}, $7A_{16}$, $A6_{16}$, $C7_{16}$, DD_{16}
0143	W	Wide-range thermistor 7-byte calibration table default = 01_{16}, $0B_{16}$, 31_{16}, $7A_{16}$, $9B_{16}$, DC_{16}, ED_{16}
014A	P	Pressure sensor calibration scale factor & bias default = 80_{16}, 00_{16}: (gain X 1.0, zero bias)
014C	F	Flooding differential pressure sensor scale factor & bias default = 98_{16}, $E2_{16}$: (gain X 1.19, -30 bias)
014E	H	Humidity sensor scale factor & bias, stop count default = $C0_{16}$, $E8_{16}$, $0B_{16}$: (gain X 1.5, -24 bias, 11 cycles)
0151	S	Photoelectric smoke detector scale factor & bias default = $8C_{16}$, $C8_{16}$: (gain X 1.09, -56 bias)
0153	I	Ionization smoke detector scale factor & bias default = $9A_{16}$, 28_{16}: (gain X 1.20, +40 bias)
0155	C	Carbon monoxide detector scale factor & bias default = $A2_{16}$, 98_{16}: (gain X 1.27, -104 bias removes 1.18V reference)
0157	O	Oxygen sensors scale factor & bias for both sensors default = 90_{16}, 00_{16}, 90_{16}, 00_{16}: (gain X 1.13, zero bias for both)

4.1.6.5.4 Environmental Cluster Locked System Constants

Address	Access	Parameter (default values are in hexadecimal)
	K	System Constants – all system constants are accessed as one string
015B		Control flags bit 7 (80_{16}) = select transmit data in ASCII mode bit 6 (40_{16}) = no CRC check on received data bit 5 (20_{16}) = no flooding sensor bias drift compensation all other bits not used default = 00_{16}: no options selected
015C		Minimum sound Vpp for a sound message to be sent default = 40_{16}
015D		Default AGC value if AP setting received from AP is invalid default = 20_{16}: midrange
015E		Number of re-sync tries before moving to next AP default = 04_{16}: three tries (tries = N-1)
015F		Number of re-sync cycles before “aging” frequency table default = 09_{16}: wait for 9 successful re-sync cycles
0160		Number of re-sync cycles before O2 sensor turns ON default = 02_{16}: wait for 2 successful re-sync cycles
0161		Slowest background transmit rate (seconds) default = 32_{16}: 50 seconds maximum between background transmissions
0162		Fastest background transmit rate (seconds) default = 05_{16}: 5 seconds minimum between background transmissions
0163		Slowest “fast” transmit rate (seconds) default = 05_{16}: 5 seconds maximum between “fast” transmissions
0164		Synthesizer stabilization delay (1.1 ms steps) default = 02_{16}: 2.2 ms
0165		Transmitter stabilization delay (6.5 µs loops) default = $0F_{16}$: 100 ms
0166		Maximum time receiver is powered for re-sync (1.1 ms steps) default = 20_{16}: 35 ms
0167		Maximum space between AP characters to keep receiver ON (12 µs loops) default = 96_{16}: 1.8 ms
0168		Delay from AP header to earliest slot request (1.1 ms steps) default = 18_{16}: 20 ms
0169		Delay from AP request to transmit response in BOD (1.1 ms steps) default = $0B_{16}$: 12 ms
016A		Default processor clock start-up interval (69.4 µs steps) default = 80_{16}: 8.8 ms
016B		Vcc low limit (Vref reading) default = $C9_{16}$: 201 = 3.0V minimum
016C		Vcc high limit (Vref reading) default = $A7_{16}$: 167 = 3.6V maximum
016D		Carbon monoxide control loop negative saturation default = $0F_{16}$: 15 = 0.2 volts minimum
016E		Carbon monoxide control loop positive saturation default = $F0_{16}$: 240 = 0.2 volts below Vcc
016F		Photoelectric smoke detector LED drive low default = $2E_{16}$: 46 = 0.6 volts
0170		Photoelectric smoke detector LED drive high default = $B1_{16}$: 177 = 2.3 volts
0171		Sensor 1 drive voltage low (powers all low-power sensors) default = $F7_{16}$: 247 = 100mV below Vcc

0172	Sensor 2 drive voltage low (powers only high-power sensors) default = FB_{16}: 251 = (50mV below Vcc
0173	Maximum difference between thermistors before reading is ignored default = 04_{16}: 2*C
0174	Number of CO = 8avg before indicate stabilized default = 32_{16}: 50 readings must match
0175	Number of O2 = 8avg before indicate stabilized default = 64_{16}: 100 readings must match
0176	Flooding sensor auto-bias nominal (used at startup) default = $0A_{16}$: 10 = 0 inches
0177	Carbon monoxide nominal (used at startup) default = $0B_{16}$: 11 = 5 ppm
0178	Oxygen sensor nominal default = $D1_{16}$: 209 = 20.9%

4.1.7 Environmental Cluster Sensor Calibration

Most sensors in the Environmental Sensor Cluster must be calibrated to provide sufficient accuracy. Almost all environmental sensors are calibrated with a combination of scale factor and bias. Scale factor varies from X 0.5 (hexadecimal 40) to X 1.99 (hexadecimal FF). The formula for scale factor is X = N/128. Bias can vary +/- 127 from zero. Zero bias is hexadecimal 00. FF is a bias of –1, and 01 is a bias of +1. All calibration coefficients must be converted to hexadecimal to be input using the configuration monitor.

While it is possible to calibrate the sensors manually via the configuration monitor, a program running on a laptop was developed to aid in the calibration process due to the number of Sensor Clusters that would need to be calibrated. The laptop program coordinates calibration of all the sensors. It walks the operator through the sensors one by one and calculates the calibration coefficients based on readings at specific calibration points. As each sensor is calibrated, the program downloads its calibration coefficients into the Sensor Cluster EEPROM. The calibration program logs test and calibration readings to the hard drive for later evaluation.

The laptop calibration program offers the following selections:

A - Scan ALL sensors: This command reads all the sensors and presents the data in engineering units. It provides a quick check to determine how well the Environmental Cluster sensors are operating.

S - Photoelectric Smoke Detector: This command is used to calibrate the photoelectric smoke detector. After reading the ambient value, the operator will be asked to squeeze the test button on the chamber so the program can measure the “test” value, and calculate the scale factor and bias needed for calibration. The test lever arm should be fully inserted into the sensing chamber for an accurate calibration.

I - Ionization Smoke Detector: This command is used to calibrate the ionization smoke detector. While similar to the photoelectric calibration, the test value is electrically asserted, and no operator action is required.

O - Oxygen Sensor @ 20.9 %: This command will calibrate the oxygen sensor scale factor, assuming the Environmental Cluster is in a standard atmospheric environment with a 20.9% oxygen level.

P - Absolute Pressure at 14.7 psi: This command will calibrate the absolute pressure sensor scale factor, assuming the Environmental Cluster is in a standard atmospheric environment with a pressure of 14.7 psi. The ambient pressure sensors installed on several of the Environmental Clusters did not perform within specifications, and could not be properly calibrated.

F - Flooding Sensor: This command will calibrate the flooding sensor. After reading the ambient zero flooding level, the operator will be asked to insert the detection probe a fixed depth into a container of water. The program uses the two values to calculate scale factor and bias to calibrate the flooding sensor.

T - Calibrate Temperature sensors at ambient: The temperature sensors are now only calibrated at a single data point. For ease of calibration, this is done at ambient temperature. This single reading is used to calculate the bias required for the active semiconductor sensor, and to adjust the family of curves for the thermistors. The "V" command is provided to verify the temperature sensors are properly calibrated over the expected habitation temperature range.

C - Carbon Monoxide Sensor: This command is used to calibrate the carbon monoxide sensor in a chamber where it can be subjected to known concentrations of the gas. The early Environmental Clusters were calibrated in this manner. The carbon monoxide sensors demonstrated acceptable accuracy with only a bias adjustment, and not all units went through this calibration process.

H - Humidity Sensor: This command is used to calibrate the humidity sensor at two points. The humidity sensor is part of an oscillator circuit. The period it takes the oscillator to make a fixed number of cycles is measured by the microcontroller. Because the nominal value of the humidity sensor can vary significantly, the calibration process sets not only the scale factor and bias, but also sets the number of cycles that are measured to achieve the desired resolution. Humidity calibration of the first Environmental Clusters was combined with the temperature calibration verification. Results from that calibration process were disappointing. The humidity sensors may have been affected by the temperature changes, perhaps due to condensation on the sensor during the low temperature portion of the test. The humidity sensor bias was adjusted subsequent to calibration so the sensors would read the correct relative humidity at ambient. It may be worthwhile investigating an alternate calibration to achieve better results.

V - Verify temperature calibration over range: After the temperature sensors are calibrated at ambient temperature, this command can be used to verify the calibration accuracy at two points in a thermal test chamber. This process was performed on the early Environmental Clusters, and the single point calibration of the temperature sensors at ambient was determined to be sufficient.

CTRL C, CTRL H, CTRL V – Calibration resets: These commands can be used to reset the carbon monoxide, humidity, or temperature calibration test parameters so that calibration cycle can be repeated.

L - Lock EEPROM (select Acquisition Mode): This simple command sets the LOCKED bit in EEPROM, and prevents the upper portion of EEPROM from being modified. The sensor cluster will proceed into the data acquisition mode, and try to establish communication with an Access Point after the EEPROM is locked. To conserve

battery power, when the EEPROM is locked the cluster should be switched off unless it is near a functioning Access Point.

U – Unlock EEPROM (select Monitor Mode): This simple command clears the LOCKED bit in EEPROM, and enables the calibration coefficients and system parameters in the upper portion of EEPROM to be altered. The sensor cluster will power up in the monitor mode whenever the EEPROM is unlocked.

X – Exit: This command terminates the calibration program.

4.1.8 Structural Cluster Configuration Monitor

A simple interactive monitor offers test modes useful for calibration, and allows calibration coefficients and system constants to be altered. The monitor is automatically entered at power-up when the EEPROM is unlocked. At a minimum, the Sensor Cluster serial number must be entered, and the protected portion of the EEPROM locked. After the EEPROM is locked, it is still possible to for the Sensor Cluster to enter the monitor. When power is cycled, the Sensor Cluster will issue the prompt "RSVP" over its serial port at 19.2K baud with the radio off. If the Sensor Cluster receives a space character within 2 seconds of the prompt, and "RSVP" within the next 10 seconds, then it will enter the monitor mode. If anything other than the space character is received within the first two seconds, or anything other than "RSVP" is received within the next 10 seconds, the Sensor Cluster transmits "END" and enters its operational mode. The Sensor Cluster does not check for entry into the monitor mode again unless power is removed for several seconds.

The following commands are available in monitor mode:

?	Sensor Query – outputs standard structural message data in ASCII format
!	Monitor the shock sensors – outputs shock event message data in ASCII format (hit a key to exit)
~	Read and display Sarcos strain sensors
^	Turn sensor power ON
_	Turn sensor power OFF
Q	Query selected sensor while EEPROM calibration data is displayed
Ctrl S	Scan A/D and output raw readings contained in the A/D buffer (used only during development)
Ctrl L	Lock EEPROM
Ctrl U	Unlock EEPROM (requires "Y" acknowledgement before the unlock is performed)
Ctrl Z	Exit Monitor (also insures EEPROM is locked)

Calibration data in locked EEPROM may be entered or modified using the following commands:

#	4-byte factory serial number	
@	PSM channel assignments (default are 1 and 81)	
T	linear temperature sensor (scale factor and bias)	"Q" reads raw & calibrated temperature
1	navigation accelerometer #1 (scale factor and bias)	"Q" reads raw, cal, max, min, 8avg, p-p
2	navigation accelerometer #2 (scale factor and bias)	"Q" reads raw, cal, max, min, 8avg, p-p
3	shock accelerometer (scale factor and bias)	"Q" reads raw, cal, 256avg
4	Sarcos strain gauge #1 (16-bit bias)	"Q" reads 16-bit raw & bias adjusted
5	Sarcos strain gauge #2 (16-bit bias)	"Q" reads 16-bit raw & bias adjusted
6	Sarcos scale factor adjustment (8-bit gain shift)	
L	6 bytes for physical location parameters (optional)	
K	provides access to all system constants that can be modified	

Thresholds and operational parameters in unlocked EEPROM may be entered or modified using the following commands:

- configuration flags (selects which oxygen sensors are enabled)

%	threshold limits for all sensors
Z	sleep interval after AP search fails in 32-second increments

Only the thresholds and operational parameters can be modified via the AP.

EEPROM data is entered via hexadecimal characters. Data can be edited using TAB to skip fields, and BACKSPACE to correct entries. Editing the displayed set of EEPROM parameters is terminated with the ENTER key. The data displayed is written to EEPROM at that time. Only valid hexadecimal characters will be accepted with one exception. If "Q" is entered immediately after sensor calibration data is displayed (with cursor still at the beginning of the line), that sensor will be sampled, and the raw and calibrated readings for it will be displayed. This function is useful during test and calibration of the sensors.

Structural Cluster Standard Data Message

3C	**Message Type for Standard Data Message**	
XX	LS Byte of 32-bit cluster ID number	
XX	Alert Status byte	
	bit 7 (80_{16}) = strain gauge #1 > positive threshold	
	bit 6 (40_{16}) = strain gauge #1 < negative threshold	
	bit 5 (20_{16}) = strain gauge #1 > positive threshold	
	bit 4 (10_{16}) = strain gauge #1 < negative threshold	
	bit 3 (08_{16}) = high navigation accelerometer #1	
	bit 2 (04_{16}) = high navigation accelerometer #2	
	bit 1 (02_{16}) = high shock accelerometer	
	bit 0 (01_{16}) = low primary battery alert	
XX	Health Status byte	
	bit 7 (80_{16}) = low/high power supply voltage	
	bit 6 (40_{16}) = not used	
	bit 5 (20_{16}) = linear temperature above high threshold	
	bit 4 (10_{16}) = linear temperature below low threshold	
	bit 3 (08_{16}) = RF signal strength below low threshold	
	bit 2 (04_{16}) = sensor power low voltage	
	bit 1 (02_{16}) = sensor 1 on low voltage	
	bit 0 (01_{16}) = not used	
XX	Battery Input (from PMM)	V = 3.3 x (reading / 128)
XX	Linear Temp Sensor Level	deg C = (reading - 40) / 2
XXXX	SARCOS strain gauge #1 positive max (16 bits)	scale factor depends on gain
XXXX	SARCOS strain gauge #1 negative max (16 bits)	scale factor depends on gain
XXXX	SARCOS strain gauge #2 positive max (16 bits)	scale factor depends on gain
XXXX	SARCOS strain gauge #2 negative max (16 bits)	scale factor depends on gain
XX	Navigation accelerometer #1 8-sample p-p average	G p-p = reading / 50
XX	Navigation accelerometer #1 PP amplitude	G p-p = reading / 50
XX	Navigation accelerometer #1 ½ cycle time	duration in seconds = reading
XX	Navigation accelerometer #2 8-sample p-p average	G p-p = reading / 50
XX	Navigation accelerometer #2 PP amplitude	G p-p = reading / 50
XX	Navigation accelerometer #2 ½ cycle time	duration in seconds = reading
XX	RSSI (received signal strength indicator)	V = 3.3 x (reading / 256)
XX	2X reference voltage (diagnostic)	(used to calculate actual Vcc)
XX	Switched sensor power "ON" voltage (diagnostic)	V = 3.3 x (reading / 256)
XX	Sync quality status (diagnostic)	unitless quantity
XX	Oscillator start-up delay (diagnostic)	time = (reading x 138 μs)
XXXX	16-bit CRC	
CRLF	(Appended only in Monitor Mode)	

4.1.8.1 Structural Cluster Shock Event Message

3D	**Message Type for Shock Event**	
XX	LS Byte of 32-bit cluster ID number	
XX	Alert Status byte	
	bit 7 (80_{16}) = strain gauge #1 > positive threshold	
	bit 6 (40_{16}) = strain gauge #1 < negative threshold	
	bit 5 (20_{16}) = strain gauge #1 > positive threshold	
	bit 4 (10_{16}) = strain gauge #1 < negative threshold	
	bit 3 (08_{16}) = high navigation accelerometer #1	
	bit 2 (04_{16}) = high navigation accelerometer #2	
	bit 1 (02_{16}) = high shock accelerometer	
	bit 0 (01_{16}) = low primary battery alert	
XX	Health Status byte	
	bit 7 (80_{16}) = low/high power supply voltage	
	bit 6 (40_{16}) = not used	
	bit 5 (20_{16}) = linear temperature above high threshold	
	bit 4 (10_{16}) = linear temperature below low threshold	
	bit 3 (08_{16}) = RF signal strength below low threshold	
	bit 2 (04_{16}) = sensor power low voltage	
	bit 1 (02_{16}) = sensor 1 on low voltage	
	bit 0 (01_{16}) = not used	
XX	Battery Input (from PMM)	V = 3.3 x (reading / 128)
XX	Linear Temp Sensor Level	deg C = (reading - 40) / 2
XX	Shock sensor 256-sample average	G average = reading - 125
XX	Shock sensor first half-cycle peak	G peak = reading - 125
XX	Shock sensor first half-cycle duration	ms = approximately reading / 5
XX	Shock sensor second half-cycle peak	G peak = reading - 125
XX	Shock sensor second half-cycle duration	ms = approximately reading / 5
XXXX	16-bit CRC	
CRLF	(Appended only in Monitor Mode)	

4.1.8.2 Structural Cluster EEPROM Calibration Data

NOTE: The first 31 bytes cannot be locked, and can be modified by the AP.

STRUCTURAL CLUSTER CONTROL (Modifiable by the AP)

Address	Access	Parameter (default values are in hexadecimal)
	+	Configuration Flags
0101		First byte of configurations flags
		bit 7 (80H) = enable respond to data request in any BOD
		other bits not used
		default = 00H: disable response in any BOD
0102		Second byte of configurations flags (not used)
		default = 00H
0103	Z	Sleep interval if AP search fails (N x 32 sec)
		default = 02H: 64 seconds
	X	Transmit parameters
0104		4 spare bytes

4.1.8.2.1 Structural Cluster Alert Thresholds (Modifiable By The AP)

Address	Access	Parameter (default values are in hexadecimal)
	%	Threshold parameters
0108		Linear temperature sensor low threshold default = $3C_{16}$: 10 degrees C (# = 40 + 2*C)
0109		Linear temperature sensor high threshold default = 78_{16}: 40 degrees C (# = 40 + 2*C)
010A		Sarcos strain gauge #1 positive fast-sample threshold (avg. peak) default = $8A_{16}$: +307 µstrain (LSB = 30.72 @ gain shift = 1)
010B		Sarcos strain gauge #1 negative fast sample threshold (avg. peak) default = 76_{16}: -307 µstrain (LSB = 30.72 @ gain shift = 1)
010C		Sarcos strain gauge #1 positive ALERT threshold (peak) default = $A0_{16}$: +1000 µstrain (LSB = 30.72 @ gain shift = 1)
010D		Sarcos strain gauge #1 negative ALERT threshold (peak) default = 60_{16}: -1000 µstrain (LSB = 30.72 @ gain shift = 1)
010E		Sarcos strain gauge #2 positive fast-sample threshold (avg. peak) default = $8A_{16}$: +307 µstrain (LSB = 30.72 @ gain shift = 1)
010F		Sarcos strain gauge #2 negative fast sample threshold (avg. peak) default = 76_{16}: -307 µstrain (LSB = 30.72 @ gain shift = 1)
0110		Sarcos strain gauge #2 positive ALERT threshold (peak) default = $A0_{16}$: +1000 µstrain (LSB = 30.72 @ gain shift = 1)
0111		Sarcos strain gauge #2 negative ALERT threshold (peak) default = 60_{16}: -1000 µstrain (LSB = 30.72 @ gain shift = 1)
0112		Nav. accelerometer #1 fast-transmit threshold (peak-to-peak) default = 14_{16}: 0.4G peak-to-peak (at 50 counts per G)
0113		Nav. accelerometer #1 ALERT threshold (peak-to-peak) default = 32_{16}: 1.0G peak-to-peak (at 50 counts per G)
0114		Nav. accelerometer #2 fast-transmit threshold (peak-to-peak) default = 14_{16}: 0.4G peak-to-peak (at 50 counts per G)
0115		Nav. accelerometer #2 ALERT threshold (peak-to-peak) default = 32_{16}: 1.0G peak-to-peak (at 50 counts per G)
0116		Shock accelerometer zero band threshold (delta from average) default = 05_{16}: +/- 5G (at 1 count per G)
0117		Shock accelerometer ALERT threshold. (delta from average) default = 14_{16}: +/ 20G peak (at 1 count per G)
0118		Battery #1 low ALERT threshold (01 for no ALERT) default = 98_{16}: 3.9V (# = 39*V)
0119		RF signal strength low threshold default = 80_{16}: half scale (# = 77*V)
011A – 011F		Spare bytes in unlocked region default = all zero

4.1.8.2.2 Structural Cluster Locked Calibration Coefficients

Address	Access	Parameter (default values are in hexadecimal)
0120	#	Sensor Cluster 4-byte serial number default = 52535650_{16} before actual cluster S/N is programmed
0124	L	Sensor Cluster 6-byte physical location reference default = all bytes cleared (not used)
012A	@	PSM channel numbers – can be changed if required due to interference default = 01_{16}, 51_{16}: Primary PSM #1, Secondary PSM #81
012C	T	Linear temperature sensor calibration scale factor & bias default = 76_{16}, 15_{16}: (gain X 0.92, +21 bias) 0C=.25V, 100C=3.05V
012E	1	Navigation accelerometer #1 scale factor & bias default = 80_{16}, 00_{16}: (gain X 1.0, zero bias)
0130	2	Navigation accelerometer #2 scale factor & bias default = 80_{16}, 00_{16}: (gain X 1.0, zero bias)
0132	3	Shock accelerometer bias default = 00_{16}: zero bias
0133	4	Sarcos strain gauge #1 16-bit bias (adjust nominal reading to 8000 hex) default = 00_{16}, 00_{16}: zero bias
0135	5	Sarcos strain gauge #2 16-bit bias (adjust nominal reading to 8000 hex) default = 00_{16}, 00_{16}: zero bias
0137	6	Sarcos scale adjustment shifts N bits from LSB to MSB in 16-bit data word default = 01_{16}: 15.....1+P default = bits 14-7 (LSB = 30.72)

4.1.8.2.3 Structural Cluster Locked System Constants

Address	Access	Parameter (default values are in hexadecimal)
	K	System Constants – all system constants are accessed as one string
0138		Control flags bit 7 (80_{16}) = select transmit data in ASCII mode bit 6 (40_{16}) = no CRC check on received data all other bits not used default = 00_{16}: no options selected
0139		Number of re-sync tries before moving to next AP default = 04_{16}: three tries (tries = N-1)
013A		Number of re-sync cycles before "aging" frequency table default = 09_{16}: wait for 9 successful re-sync cycles
013B		Synthesizer stabilization delay (1.1-ms steps) default = 02_{16}: 2.2 ms
013C		Transmitter stabilization delay (6.5-µs loops) default = $0F_{16}$: 100 ms
013D		Maximum time receiver is powered for re-sync (1.1-ms steps) default = 20_{16}: 35 ms
013E		Maximum space between AP characters to keep receiver ON (12-µs loops) default = 96_{16}: 1.8 ms
013F		Delay from AP header to earliest slot request (1.1-ms steps) default = 18_{16}: 20 ms
0140		Delay from AP request to transmit response in BOD (1.1-ms steps) default = $0B_{16}$: 12 ms
0141		Default processor clock start-up interval (69.4-µs steps) default = 80_{16}: 8.8 ms
0142		General Quarters mode start-up delay (1.1-ms steps) default = 07_{16}: 7.7 ms (simulates normal clock start-up interval)
0143		Vcc low limit (Vref reading) default = $C9_{16}$: 201 = 3.0V minimum
0144		Vcc high limit (Vref reading) default = $A7_{16}$: 167 = 3.6V maximum
0145		Sensor 1 drive voltage low (powers all low-power sensors) default = $F7_{16}$: 247 = (100mV below Vcc)
0146		Sensor 2 drive voltage low (powers only high-power sensors) default = FB_{16}: 251 = (50mV below Vcc)

A description of the major electrical and functional characteristics of the RSVP Environmental Sensor Cluster and Structural Sensor Cluster (ESC and SSC) can be found in the RSVP Systems Engineering Study [ref 4] . The Environmental Sensor Cluster is designed to monitor a set of parameters to determine whether a fire or flooding condition exists in a ship compartment. Included are redundant temperature sensors, both photoelectric and ionization smoke sensors, and sensors that monitor carbon monoxide, oxygen, and humidity levels. A differential pressure sensor can measure flooding using an external probe. An external input is also available for a hatch-position indicator. The Structural Sensor Cluster provides external interfaces for two navigation accelerometers, a shock accelerometer, and two SARCOS strain sensors. The Structural Sensor Cluster samples these sensors periodically, and adjusts its sample rate as warranted by sea

conditions. The shock sensor is only monitored in General Quarters mode to conserve power.

Data from both the Environmental and Structural Sensor Clusters are periodically transmitted to an Access Point (AP) in the compartment, which combines that data with data received from other clusters and forwards it on to a monitoring station. Alert conditions are also sent to the Access Point whenever a sensor reading exceeds a predetermined threshold. The Access Point can change thresholds and sample rates to select an optimum tradeoff between data granularity and power consumption.
The Environmental and the Structural Sensor Clusters share the same circuit board design. Portions of the circuit board are populated differently, a function of which cluster is being assembled. A completed cluster assembly includes the environmental or structural circuit board, a power module containing a battery pack and regulators, and a radio module that provides the RF link to the Access Point.

4.1.9 Power Management Module (PMM)

The RSVP power module supplies regulated power to an RSVP environment or structural sensor cluster. The power is supplied from a capacitor that is charged with power scavenged from the environment or from a battery if there is insufficient scavenged power. The sources of scavenged power can be photovoltaics, thermoelectric, vibration-to-electric or any others that can supply charge to a capacitor. The specific design and implementation of the RSVP power module is based mainly on the use of photovoltaics, due to the lack of specific information on other techniques for scavenging power. A primary (non-rechargeable) battery is used for startup and as a backup to the scavenged power sources.

4.1.9.1 Requirements and Goals

The requirements for the RSVP power module are listed in Table 8. We define a specification (Spec) as an RSVP requirement that must be met, and a goal as a requirement that the RSVP program would like to meet. Acceptable performance may not require meeting all goals. For example, lower efficiency may be acceptable depending upon solar cell performance and load requirements.

Table 8 Specifications and Goals for the RSVP Power Module.

Requirement	Values	Conditions	Description / Comments	Category
Nominal Output Voltage (primary)	3.3 Vdc	Iout less than maximum values	Voltage supplied to RSVP module	Spec
Nominal Output Voltage (secondary	9 Vdc	to be determined	Voltage for some sensors	Spec
Output Voltage Limits, primary output	3.45 V max 3.15 V min	1mA < Iout < 100mA	Nominal output +/-5%	Spec
Average Output Current primary output	0.33 mA min		Average current supplied to RSVP module excluding power module self-consumption	Spec
Maximum Output Current (primary)	100 mA		Peak current supplied to RSVP module	Spec
Load Regulation, primary output	100 mV	10mA < Iout < 100mA	Load regulation specifies how much the output changes voltage when the load current changes.	Spec
	5 mV	Iout < 10 mA		
Average Output Power	2 mW		Average power delivery capability of power module electronics. Assumes	Goal

			sufficient power available from PV source.	
Efficiency	>50%	nominal output power level	Power out / power in from PV source.	Goal
Supply current	30 microamps	average	Current required for operation of power module. Does not include current supplied to load.	Goal
Lifetime	5 years min.		Time of operation and/or storage without replacing battery, etc.	Goal
Scavenged Energy Storage	0.1 Joule minimum		This determines how long the power module can supply the load without energy input. T= energy / power out. For a 1mW load, this capacity is 100 s.	Goal
Primary Battery Capacity for 180 day Demonstration	4 Amphour	300 microamp load, 180 days	For 180 day demonstration assuming worst case of no scavenged power and factor of 3 safety margin.	Goal
Primary Battery Voltage	5.5V > Vbat > 3.6V	Operational lifetime, Iout < 100mA	Maximum is determined by ASIC maximum logic voltage, minimum is set by linear regulator dropout.	Spec
Monitoring capabilities			Includes provisions for external monitoring of the battery and output voltages	Spec

4.1.9.2 Power Module Description

Figure 10 shows a simplified block diagram of the power module. In power scavenging mode, the photovoltaic array and thermoelectric and vibration-to-electric power sources deliver power to the power module ASIC. The energy from the sources will be temporarily held on input storage capacitors. The power module ASIC converts dc power from the input storage capacitors and delivers it to the main energy storage capacitor. Power from the main storage capacitor is regulated and delivered to the loads. A voltage regulator is used to control the voltage (3.3V) supplied to the primary load, and a step-up regulator is used to produce the secondary (9V or other) output. The power module ASIC monitors the voltage of the primary battery, the primary output and the storage capacitors. This information is used to help regulate the primary output voltage and is supplied to the RSVP processor module as analog levels at the request of the processor. For startup, the power module ASIC will draw power from a primary battery and use this

source instead of the main energy storage element until it senses that sufficient energy has been stored to allow changeover to scavenged power mode.

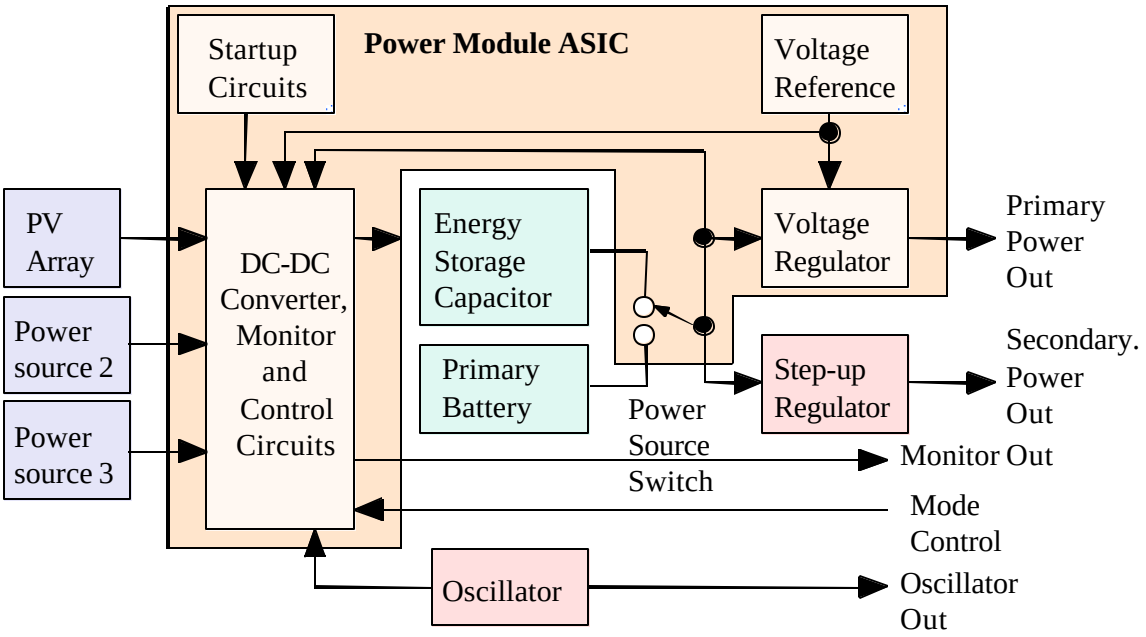

Figure 10 Power Module Block Diagram

Although the load presented to the RSVP power module requires a very low average power, the instantaneous current required can vary from 16 microamperes to 100 mA. Furthermore, in some infrequent circumstances, the power module may need to supply 70 mA for as much as 20 seconds.

It is possible that the scavenged power sources will provide sufficient power to meet the average power needs. The main energy storage element (capacitor) has sufficient capacity to deliver the maximum currents, but only for short periods (milliseconds). This should be sufficient for normal operation, but not for the frequency scanning operation (70mA and 20s). In that infrequent circumstance, the power module will switch back to the primary battery.

Figure 11 shows a more detailed diagram of the power module. The various elements are described in greater detail in the following subsections. Most of the elements are part of the power module ASIC. External elements include the PV module, the alternate power sources, blocking diodes, storage capacitors, the oscillator and the step-up regulator.

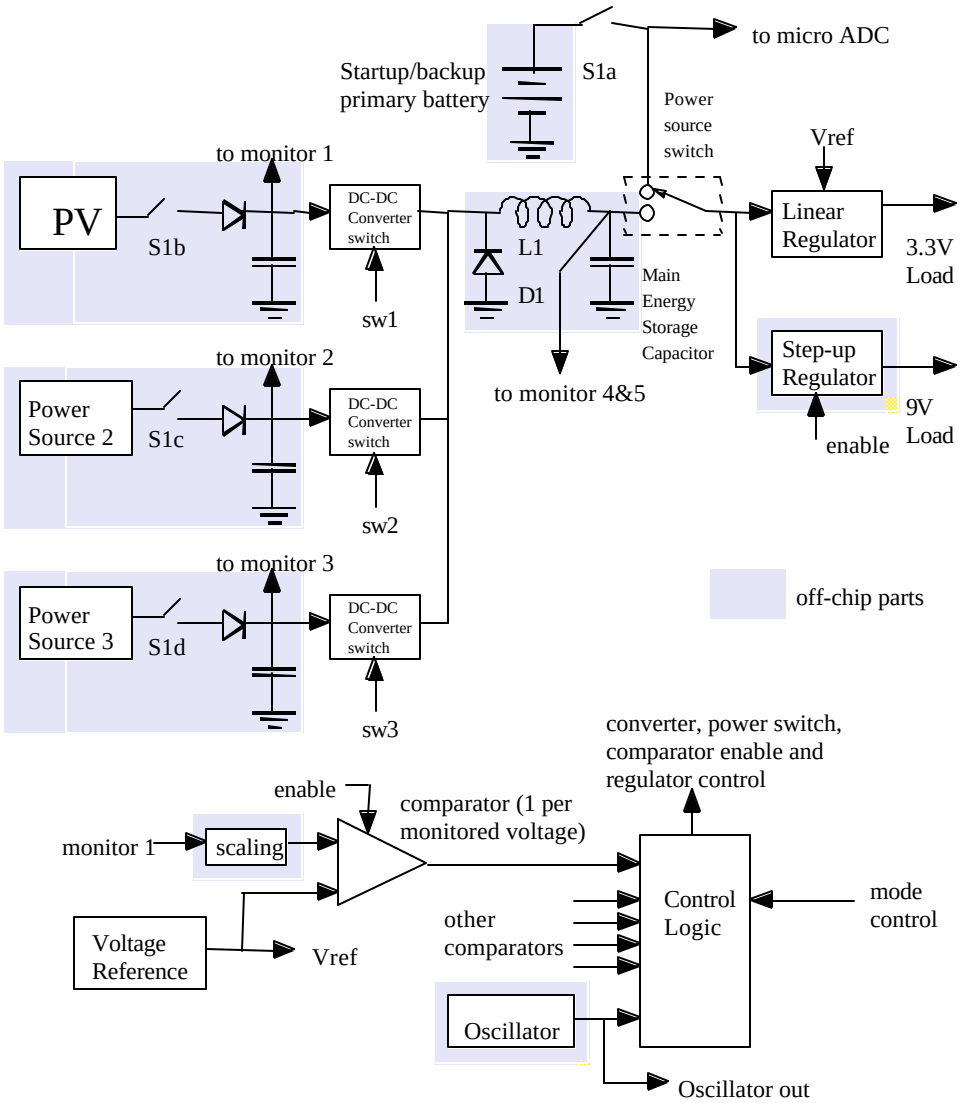

Figure 11 Detailed Diagram Of Power Module

4.1.9.3 Photovoltaic Module, Blocking Diode & Charge-Storage Capacitor

The photovoltaic module supplies current that ultimately is used to recharge the main energy storage element. Because of the expected variations in light levels, the output voltage of the PV module will vary over perhaps a two-to-one range. This voltage will also depend on the PV type (crystalline, amorphous, etc.). Evaluation of several photocells led to the conclusion that a standard PV module having a nominal output of 12-Vdc in direct sunlight can produce dc levels of approximately 4 to 6V in the compartment lighting. This voltage level is then stepped down to that of the main energy storage element.

For the power management module prototype, a photovoltaic module was constructed from a number of silicon photodiodes that had been developed for a PV efficiency study. Each diode was 2 cm by 2 cm and 16 were connected in series to make a sub-module.

The module was made by connecting 3 sub-modules in parallel. Figure 12 is a photograph of the photovoltaic module, and Figure 13 is a graph of the I-V characteristic of the module for fluorescent illumination in a typical laboratory setting. With this illumination, the PV module can supply the level of power needed for the sensor cluster (approximately 1 mW.) Light levels on a ship are expected to be lower.

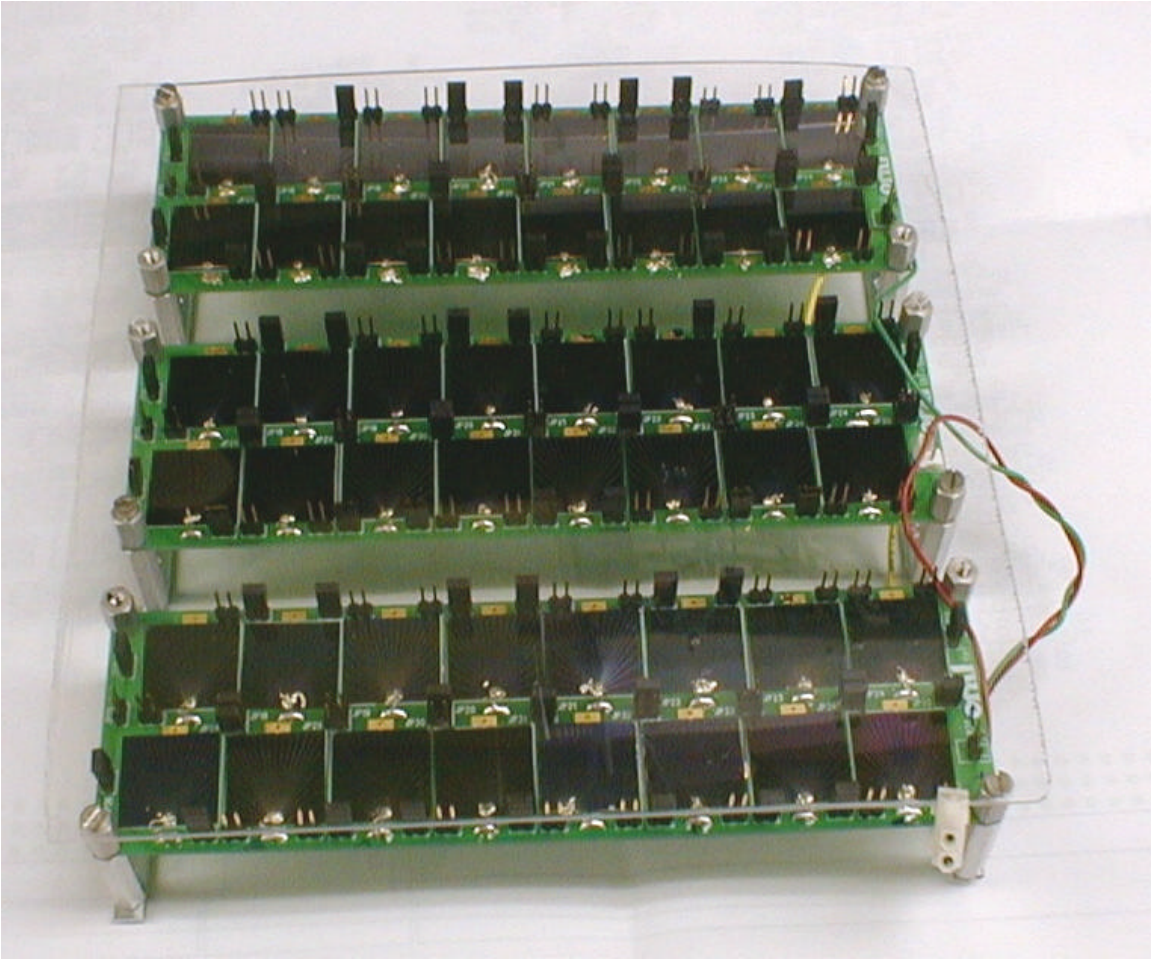

Figure 12 Prototype Photovoltaic Module.

A blocking diode is required to keep the PV module from discharging the storage capacitor in a no-light situation. The forward voltage of the diode (when conducting) represents a loss of energy, so a diode (10BQ015) with a low forward voltage was chosen.

The storage capacitor collects charge from scavenging sources and supplies it through the power module ASIC to the load. Since the amount of power required by the load may at times be much greater than that supplied by the scavenging sources, the storage capacitor must have sufficient capacity so large amounts of power may be supplied to the load for short periods. For example, the load may require on the order of 3.3 V times 100mA for 1 ms, and during such an event, the capacitor discharges much faster than it is being charged, so its terminal voltage falls. Of course, the larger the value of capacitance, the

lower the loss of voltage. Unfortunately, a larger capacitance is also physically larger and has greater leakage current (which represents a loss of energy.) Ultimately, conventional low-leakage electrolytic capacitors (10,000 uF, Panasonic part number ECA1CH103) were chosen for the charge storage capacitor.

If the PV module is exposed to direct sunlight, its power output can be as much as 1000 time the amount expected during shipboard operation. In this case, the PV module output may be a higher voltage (possibly 20V) than the power module ASIC is capable of handling (12V). A limiting circuit such as a Zener diode or a crowbar circuit using a thyristor should be included to protect the ASIC. The Zener circuit would need to limit the voltage to the power module ASIC to approximately 10 V. A crowbar circuit would clamp the PV module output to approximately zero volts until the PV array was placed in the dark. Either circuit would be external to the ASIC and draw negligible power under normal operating conditions.

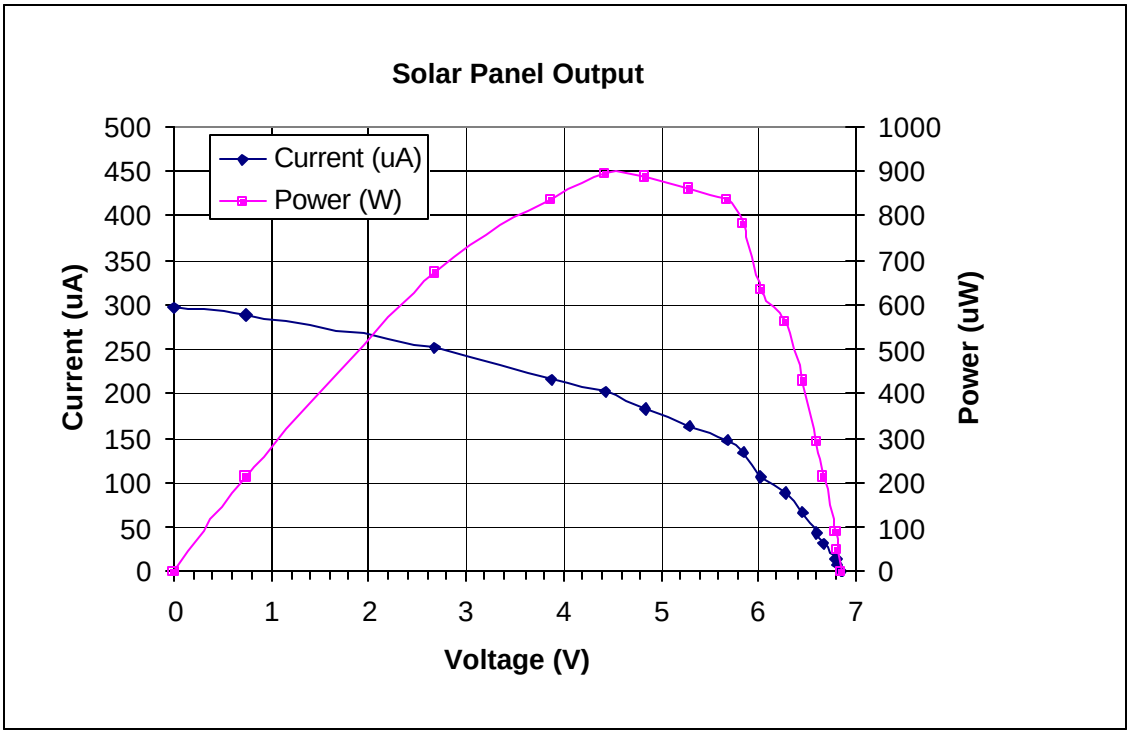

Figure 13 Prototype Photovoltaic Module I-V Characteristic.

A clamp circuit was developed to magnify the power dissipation capability of a low-power Zener diode. This circuit is shown in Figure 14. It uses two small signal bipolar transistors to amplification of the diode current and a low-cost power MOSFET to provide power dissipation.

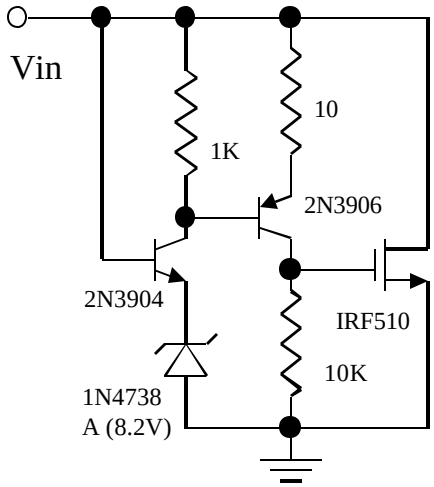

Figure 14 PV Clamp Diagram

The performance of this circuit is quite good. The nominal clamping voltage is 8.6 V (this could be adjusted up or down by choosing a different zener diode.) At input voltages less than 8.43 V input, the circuit draws no more than 10 microamps, and as shown in Figure 15, the clamp characteristic is very abrupt.

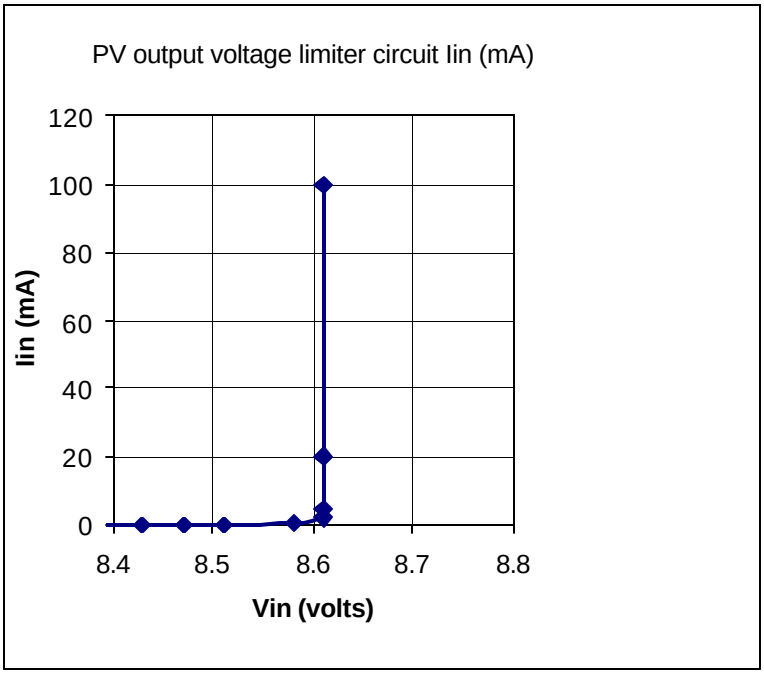

Figure 15 PV Limiter Clamping Behavior.

4.1.9.4 Alternate power sources

Alternate power sources are handled in much the same way as the PV module. Charge from the power sources is accumulated on a capacitor. When the voltage reaches a sufficient level, the dc-to-dc converter would be turned on to transfer the accumulated energy to the main energy storage element. This process would continue until the voltage decreased to a lower limit determined by the capability of the dc-to-dc converter. The power module monitors the several sources and intelligently switches between them.

4.1.9.5 Source input requirements

Figure 16 shows a model of the input impedance seen by an alternate power source and by the PV module. The input to the PMM can be modeled using a diode, a capacitor and a resistor. Current from the source flows through the diode into the parallel combination of the capacitor and resistor. The resistance is a function of the current of the load and the frequency of the switching between sources (should more than one source be active.)

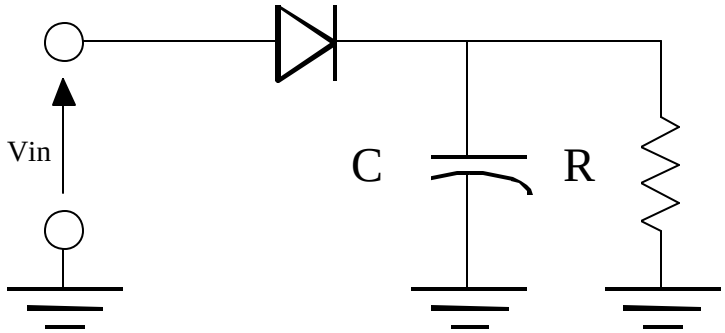

Figure 16 PMM Input Model Seen By Power Source.

The ASIC architecture limits the range of power source currents and voltages that are acceptable. These limits are outlined in Table 9.

Table 9 Source Requirements and PMM Input Characteristics.

Requirement	Value	Conditions	Description/Comment
Input Voltage, source operating	8.5 V maximum 4.5 V minimum	Source supplying power to PMM	
Input Voltage, source not operating	8.5V maximum, 0 V minimum	Source not supplying power to PMM	if the input voltage exceeds 4.5 volts, the PMM may draw current from that input
Input Current, maximum	10 mA	average	actual current will depend upon loads, may not exceed this average value

Input Current, maximum peak	1 A	instantaneous peak	average value must not be exceeded
Input Current, minimum	0		may not be negative
PMM Input Capacitance	10,000 microFarads	nominal	
PMM Input Resistance	minimum 7kohm @ 10 mA maximum 200kohm @ 0.3 mA	PMM drawing power from power source	depends on load current

4.1.9.6 Primary Battery

The primary battery used for the prototype PMM consists of three alkaline AA cells. This results in a nominal terminal voltage of 4.5 V and a capacity of approximately 2 amphours. This is more than sufficient for a 180-day demonstration of a sensor cluster.

Other primary battery types could be used with the PMM. The maximum battery voltage allowable is 5.5 V (this is dictated by the maximum supply voltage of the power module ASIC), and the minimum battery voltage is 3.6V (this is dictated by the operation of the power module ASIC power source switch and linear regulator). For use with the RSVP sensor cluster, the battery should also be able to source up to 70 mA with a terminal voltage of at least 3.6 V.

4.1.9.7 Oscillator

An oscillator is used develop the clocks required for the dc-to-dc converters and for the state machine that controls the operation of the power module ASIC. A 32.7-kHz, low-powered oscillator (ECS number ECS-327SMO) was chosen for use in the power management module. This oscillator is very small and requires approximately 10 microamperes for operation. The oscillator draws unregulated power from the power switch output of power module ASIC.

4.1.9.8 Power Module ASIC

The power module ASIC has a number of functions. It monitors the voltage of the various energy storage elements. Based on these voltages, it transfers energy from the sources to the main energy storage element and chooses between the main energy storage element and the primary battery to supply power to the outputs. It also supplies the monitored voltages to the RSVP processor.

In typical integrated circuit processes of today, supply voltages are in the 1.5 to 5-volt range, with the trend towards even lower voltages. Lower voltages translate to lower power consumption. The scavenged power sources for RSVP may produce voltages

considerably higher than 5 volts. For RSVP, AMI's 1.2-micron ABN process was chosen. This is an N-well, 14-mask CMOS process with 2 metal and 2 polysilicon layers available. It is available at low cost through the MOSIS prototyping service, which makes it suitable for a development and demonstration project. This ABN process is nominally a 5-V process, but it allows, with the use of Poly2 transistors, supply voltages in the range of 2.5 to 11 volts. To accommodate these higher voltages, larger transistors are required with a minimum gate length of 3.5 microns.

The power module ASIC contains the elements shown earlier in Figure 11. These elements can be seen in Figure 17, which is the physical layout of the IC, and they are described in greater detail in the following subsections. The ASIC is approximately 2.2 mm square and has 44 bonding pads around its periphery.

4.1.9.9 DC-DC Converter

The DC-DC converter is used to transfer energy developed by the scavenged sources and accumulated on the input capacitors to the main energy storage capacitor. The use of the DC-DC converter and low-dropout linear regulator allows this energy transfer to take place with good efficiency over a wide range of source voltages. For a linear regulator alone, the maximum efficiency is given by the ratio of the output voltage to the input voltage. For a the case where the input voltage is not much larger than the output voltage, this efficiency is good, however if the input voltage is several times the output voltage, the efficiency is poor. For the combination of the DC-DC converter circuit and the linear regulator, the efficiency is the product of the two efficiencies. If the DC-DC converter output is adjusted to give just above the minimum required by the linear regulator, then the efficiency of both can be good and the overall efficiency can be good or at least fair. Table 10 compares the relative net efficiency for both approaches. The assumptions are: DC-DC converter efficiency is 80%, the output voltage is 3.3 V and the linear regulator requires a minimum of 3.6 V input. This table shows that over much of the range of expected input voltages, that the combination of converter and linear regulator has better efficiency than the linear regulator alone.

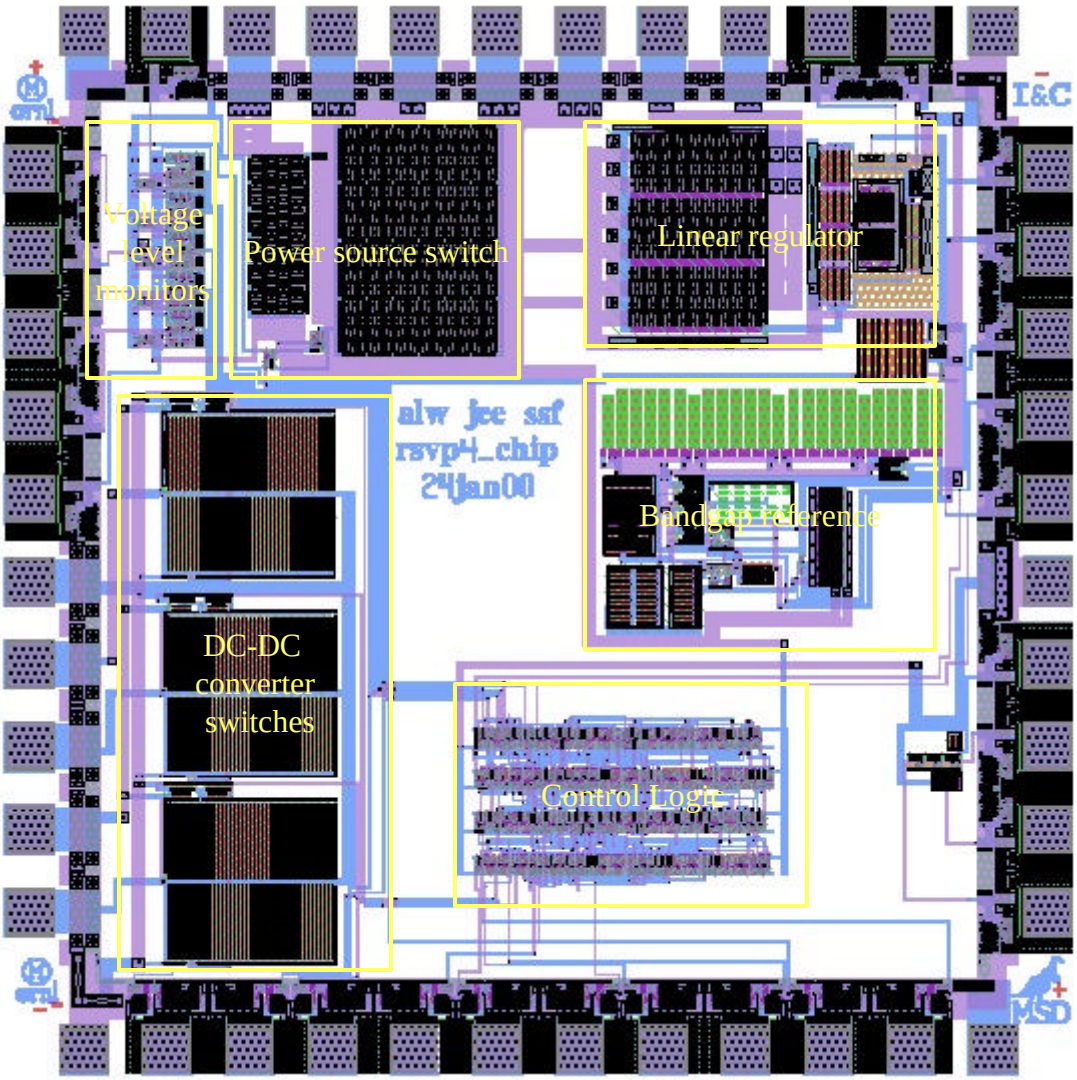

Figure 17 Power Module ASIC Layout.

Table 10 Comparison of regulator efficiencies.

Input Voltage	Efficiency – linear regulator only (%)	Efficiency – DC-DC converter and linear regulator (%)
3.6 V	92	73
5	72	73
6.6	50	73
10	33	73

The DC-DC converter circuit used is shown in simplified form in Figure 18. This type of converter is called a Buck, or step-down converter. The Buck converter produces a lower average output voltage than its input voltage. This mode of operation is known as the

forward mode, with a LC filter section directly after the power switch. Operation of the Buck converter consists of closing the switch so that charge flows through the inductor and into the capacitor and load. The current passing through the inductor increases linearly resulting in increasing energy storage in the inductor. When the switch is opened, the energy stored in the inductor cannot change instantaneously, so that current must still continue to flow. This causes the voltage at the input of the inductor to fall below ground potential. The diode, therefore, becomes forward biased which provides a current path. The output filter capacitor maintains the output voltage, at least temporarily. As the current supplied through the inductor decreases due to the reversed polarity, the load current must be partially supplied by taking charge from the output capacitor and its voltage decreases. If it is properly sized, this voltage drop is small and it is recharged the next time the switch closes. Regulation is accomplished by controlling the duty cycle.

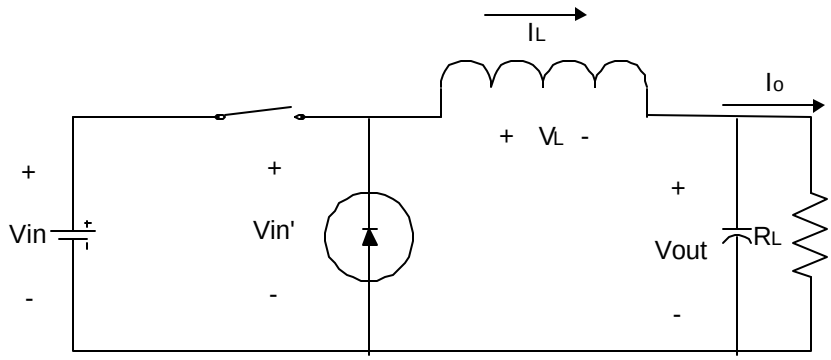

Figure 18 DC-DC Converter

4.1.9.9.1 DC-DC Converter Switch

The DC-DC converter switch is implemented using a CMOS transmission gate constructed using the second polysilicon layer (poly2) MOSFETs. The use of the poly2 MOSFETS allows the power management ASIC to withstand up to 11 Vdc from the scavenging power sources. The devices making up the transmission gates were sized to allow at least 10 mA currents to be passed with less than a 0.25V drop. Any voltage drop is a loss in efficiency in transforming energy from the sources. For the expected current levels (less than 1 mA) from the scavenged sources, the energy loss in the DC-DC converter switch should be negligible.

These transmission gates must be controlled using logic signals with the same voltage as the dc input, but they must be derived from the low voltage logic signals used in the rest of the ASIC (3.6 to 5 V). This required logic level translators, and these were implemented as inverters constructed using poly2 transistors and having a weak PMOS device.

4.1.9.9.2 Diode and Inductor

The non-ideal diodes actually used in the DC-DC converter exhibit parasitic resistance, leakage current, and (non-zero) forward voltage drop. The diode also needs to have a fast time response to allow rapid change from forward to reverse bias. The Schottky diode family characteristics include a low forward voltage drop and low leakage current. These are often selected for DC-to-DC conversion applications and, therefore, one with suitable characteristics (10BQ015) was chosen for use here.

The inductor chosen for use in the DC-DC converter is a 1 mH coil (Toko part number 181LY-102). It has a maximum dc resistance of 3.4 ohms and a maximum dc current of 90 mA.

4.1.9.10 Main Energy Storage Capacitor

The main energy storage element is the primary repository of stored energy for the RSVP power module. In general, a larger value would be preferred, as long as the leakage did not represent an excessive loss of power. To determine the lower limit on the capacitor value, the current needs of the system were considered. During a typical sensor cluster operation, there is a current drain of 10 mA for 2 milliseconds. Since ? Q= I ? t, the charge change is found to be 20 microcoulombs. (We assume that the scavenged current is much, much less than this current and may be ignored for this calculation. We also assume that the high currents required by RF communications are supplied by the battery.) If the linear regulator has an output of 3.3 V and a dropout voltage of 0.1 V, then its input must be at least 3.4 V. That voltage is the output of the power source switch. If that switch has a voltage drop of 0.1 V at maximum current (10 mA), then the voltage on the storage capacitor may drop by no more than 0.1 V to maintain regulation. For 20 microcoulombs, this leads to a minimum capacitor size of 200 microfarads. We chose a very conservative value of 20,000 µF (two of the 10,000 µF capacitors like those using on the source inputs).

4.1.9.11 Power Source Switch

Under some circumstances, the energy contained in the main energy storage capacitor may not be sufficient to allow operation of the sensor cluster. For startup, this element will be completely discharged. The power module will start with the power source switch set to select the primary battery. This will allow the power module to start its own operation and to almost immediately supply power to the other modules. Once the power module senses sufficient voltage (energy) on the main energy storage capacitor, it will use the power source switch to connect the output regulators to the main energy storage capacitor. Should the voltage of the main energy storage capacitor become too low, the power module will switch back to the primary battery until the voltage of the main energy storage capacitor exceeds its lower limit. The processor will also be able to control the power source switch. If the sensor cluster requires high current mode, the

processor can force the power module to switch over to the primary battery as long as needed.

The power source switch is implemented using two CMOS transmission gates to form a single-pole, double-throw (SPDT) structure. It is not symmetric – the transmission gate for the battery is sized to allow currents of up to 100 mA with a voltage drop of no more than 0.2 V, while the other transmission gate is sized to allow currents up to 20 mA with a voltage drop of no more than 0.2 V.

4.1.9.12 Voltage reference

A band-gap voltage reference is included in the power module ASIC. Like most band-gap circuits, its nominal output is approximately 1.2 V. This voltage is amplified and buffered using an opamp in a non-inverting gain configuration to produce an output of 2.2 V. To conserve power, the reference is only powered up periodically (3 cycles out of every 32). Since the linear regulator requires a continuously on voltage reference, the output of the voltage reference is sampled using a simple sample-and-hold circuit (transmission gate and hold capacitor). This circuit holds the voltage reference for the linear regulator until the voltage reference circuit is powered up again and re-sampled. The schematic for the complete voltage reference is shown in Figure 19.

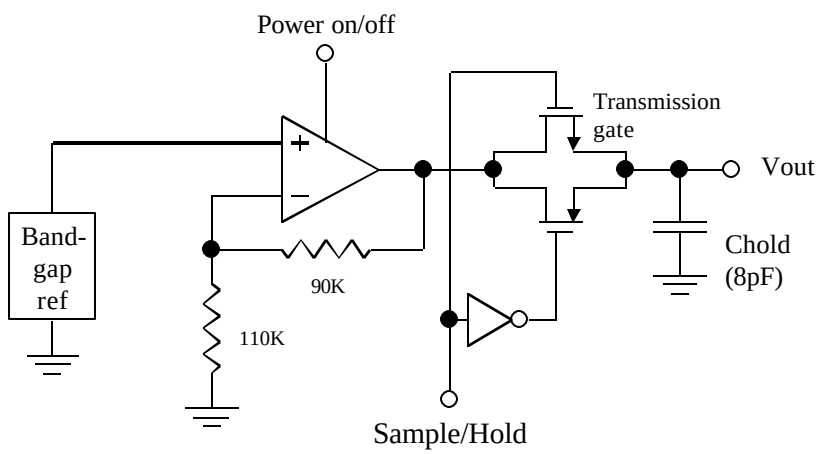

Figure 19 Voltage Reference For Power Management ASIC

4.1.9.13 Voltage level monitors

The voltages of interest (power sources and main energy storage capacitor) are examined using voltage level monitors. Each voltage monitor consists of a comparator, a voltage divider and a connection to the voltage reference. The voltage to be monitored is connected to the top of the divider, and the center of the divider is connected one input of the comparator. The other comparator input is connected to the voltage reference. This arrangement gives a fixed voltage threshold. Each voltage to be monitored is compared to the appropriate threshold, and the states of the comparator outputs are used by the state machine control logic to control the operation of the power module. For example, the

main energy storage capacitor voltage is monitored for a fully-charged level and a "too-low" level. If the element is fully charged, then the charging process will cease. If the element is between the two levels, it will be charged as power is available. If the element is "too-low" then the module will switch over to the primary battery and power should be conserved. In the case of the scavenged power inputs, the voltage level monitor will determine if they are high enough to merit transferring power to the main energy storage element.

The voltage limit monitor comparators will only be powered up as needed to save power. For normal operation, the voltages are checked every 16 clock cycles (about every 0.5 ms). Based on the expected charging currents and load currents, this should be frequent enough so the power management module should always function properly. For the scavenged power sources, the voltage is checked less frequently (every 64 clock cycles) if no power is seen for several monitoring cycles. A comparison takes only one half clock cycle (16 microseconds), so even the normal duty cycle for the comparators is very low (3%). This reduces the average power taken by the comparators by a factor of 32.

The limit voltages are set using external, high-value resistors. This was done for a number of reasons. First, this allows the use of resistors with higher values (and lower power dissipation) than would be possible with on-chip resistors. (Precision resistors above about 50 kohm are excessively large when fabricated on-chip.) Second, the use of external resistors allowed adjustment during prototype development and fine-tuning of production units, if desired. Third, using external resistor dividers resolved potential voltage limit problems. Some of the voltages that need to be monitored (sources) may be greater than the operating voltage of the ASIC (4-5 V, only the DC-DC switches allow higher voltages). With the external voltage divider, the voltage presented to the ASIC is always less than the operating voltage.

4.1.10 Control logic for the power module

A state machine controls the operation of the power module. In normal operation, this control logic starts the power module by drawing power from the primary battery, and then checks for the availability of scavenged power by scanning the voltage monitors. If power is available, it then turns on the appropriate dc-to-dc converter for a fixed number of cycles, if not, it waits for a while and checks again. The logic also checks that voltage of the main energy storage capacitor. If this voltage is high enough, it switches the input of the linear regulator to this capacitor (and away from the primary battery.) If the voltage of the main energy storage capacitor reaches a second, higher level, then it is deemed fully charged and the DC-DC converters are turned off until the voltage drops below that level. This process continues until there is no power available, or the unit is turned off. The control logic would also enable the secondary output regulators depending upon the state of the request from the processor module

Figure 20 shows a simplified timing diagram illustrating this operation. Trace A shows a source voltage that gradually increases. This represents a successful scavenging

operation. Trace B shows comparator signals – these are the enables of the voltage monitors. During the time when these signals are in the high logic state, the voltage monitors are turned on and five levels (sources 1, 2 and 3, and main energy storage capacitor lower and upper levels) are checked. This on/off cycling is done to save power. Trace C shows the output of the source 1 voltage monitor. It goes to a high logic level when the threshold is passed. This starts the clock for the DC-DC converter (Trace F), and the voltage of the main energy storage capacitor starts to rise (Trace D). When this voltage reaches the minimum limit (Trace E), the input of the linear regulator is switched so that it draws power from the main energy storage capacitor (unless the processor indicates high power mode and forces it to draw power from the battery.) Eventually, the voltage of the main energy storage capacitor may increase to the point where the maximum threshold is passed (Trace G, inverted logic used here) and the DC-DC converter is turned off, until the voltage drops back below the maximum threshold.

Depending upon the load power requirements and the source capabilities, a number of operating modes are possible. Figure 20 illustrates a case where the source can supply more power than the load requires. In this case, the DC-DC converter will be cycled on and off and the main energy storage capacitor voltage will stay between the minimum and the maximum thresholds. For a less powerful source, the DC-DC converter may run continuously and the maximum threshold may never be reached, but the level will stay above the minimum threshold. Alternatively, the load may draw the main energy storage capacitor voltage back below the minimum threshold, and the logic will switch back to battery power. In this case, the module may cycle between battery and scavenged power. Other sequences are possible if the load and sources are not constant.

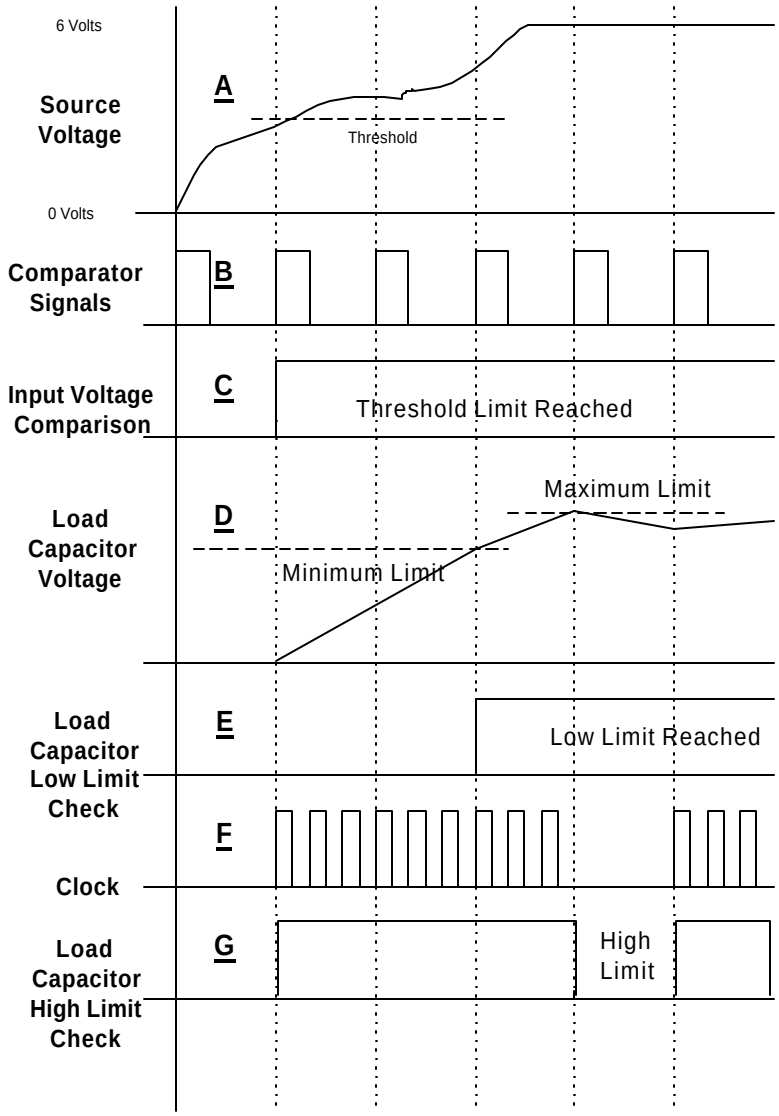

Figure 20 Power module ASIC timing diagram with control signals.

4.1.11 Linear Regulator

A low-dropout linear regulator is the source of the main output (3.3V nominal). The regulator is capable of operating over a wide range of output currents (<100 µA to >100mA), and has a dropout voltage less than 100 mV. A simplified schematic for the regulator is shown in Figure 21. It consists of a CMOS opamp and a PMOS pass transistor. Use of a very large PMOS pass transistor (width = 20400 microns and length = 1.2 microns) allows the output to approach the input voltage even for high output currents. The gain-setting resistors are chosen to set the output to 3.3 V with a 2.2-V reference. High-value, external resistors were used to allow the output to be adjusted (due to uncertainty in the reference voltage) and reduce the power needed by the regulator circuit. (Resistors with values above approximately 50 kohm are unreasonably large when implemented as part of the ASIC.)

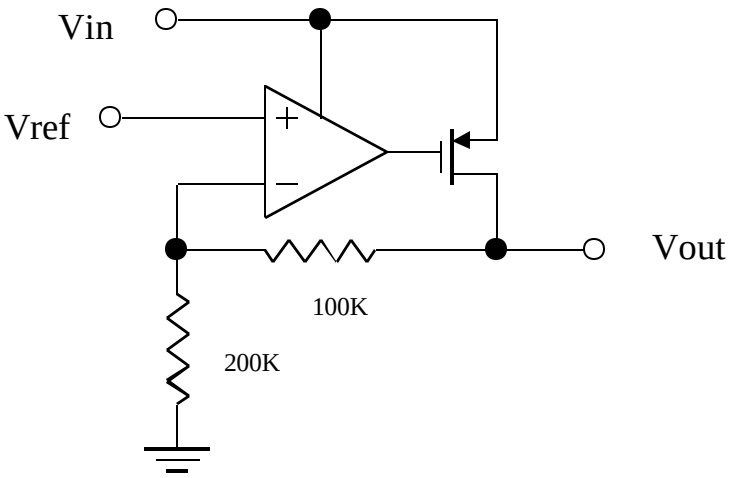

Figure 21 Simplified schematic of linear regulator.

Figure 22 illustrates some of the regulator's capabilities. The nominal output is very nearly 3.3 V, and regulation is maintained for a 331-ohm load (10 mA) down to an input of 3.322 V. This translates to a dropout voltage of about 25 mV for a 10 mA load.

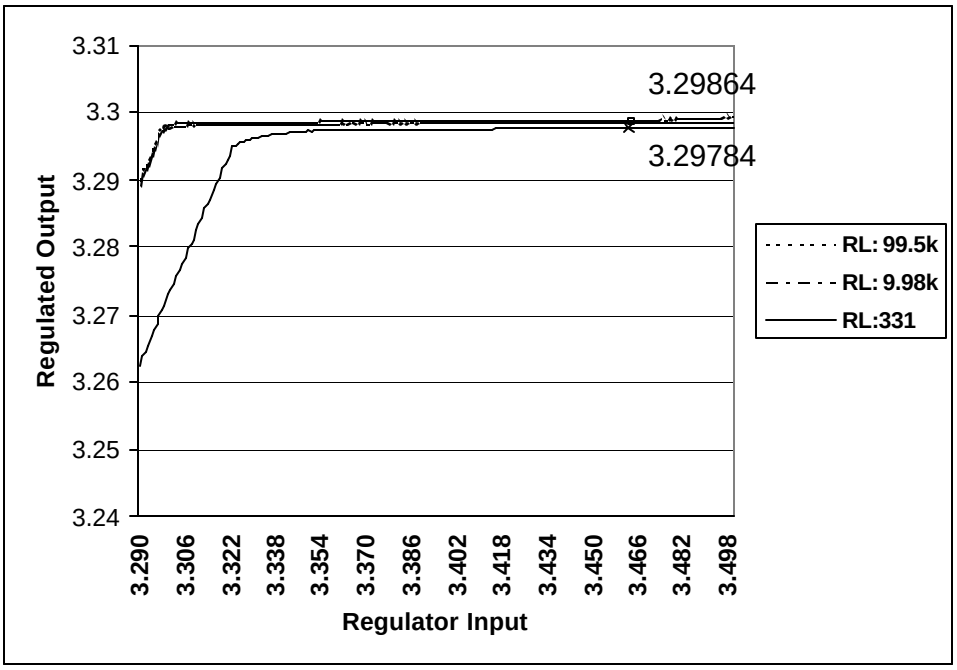

Figure 22 Linear regulator input/output characteristics.

4.1.11.1 Step-up regulator

Some applications of the power module require a secondary output voltage. This secondary voltage is supplied by an external step-up regulator. This regulator is normally turned off, and is turned on by a control signal from the processor module. The prototype power module includes both 5-V and 9-V step-up regulators. Both use a Linear Technology LT1615 integrated circuit. The on/off function is achieved using a PMOS device (IRLML6302) to switch the power to the converter on or off.

4.1.11.2 Power Module startup and shutdown

The power module uses a manually-controlled, multi-pole switch to connect it to the various power sources (primary battery, PV module and alternate power sources.) For storage, this switch should be open and the power module is disabled and draws no power from any source. On startup, the switch should be closed and the power module ASIC will start operation. To cease operation, the switch should be opened and operation will stop after power is exhausted from the energy storage elements (capacitors.)

4.1.11.3 Power Module and Sensor Cluster Processor Interface

Table 11 shows a list of the power module signals connecting to the sensor cluster processor.

Table 11 Power Module Interface Signals.

Signal	Type	Description
Secondary output voltage enable	Digital input, active high	When true (high), the secondary output voltage converter is turned on. When low (false), this converter is off.
High current mode enable	Digital input, active high	When true (high), the power module operates in the high output current mode and draws power from the primary battery. When false (low), the power module internal logic determines the power source (battery or capacitor bank).
Primary battery voltage	Analog voltage	For monitoring by the ADC
Linear regulator input capacitor bank voltage	Analog voltage	For monitoring by the ADC
Charging circuit enable	Digital input, active low	When true (low), the power module charging circuits are enabled. When false (high), they are disabled. *This signal is optional and may not necessarily be supplied by the processor.*
32kHz Oscillator output	Digital output	Buffered copy of 32kHz oscillator output
Power Ground	Analog power	Return path for supply current
3.3 V	Analog power	Main regulated supply voltage
Secondary voltage	Analog power	Secondary output voltage (value *TBD*)

4.1.11.4 Results

The power management module was developed in several stages. In the first stage, the various components of the PMM ASIC were fabricated using separate elements on two ASICs. These were tested individually for function and performance, and then were combined into a power management module as shown in Figure 23. The logic needed for the power management module was implemented using an Altera programmable logic device (PLD). This allows the state machine to be revised as needed during the development stage. Some of the elements, such as the band gap reference, were made in several versions, and the best version was determined during testing.

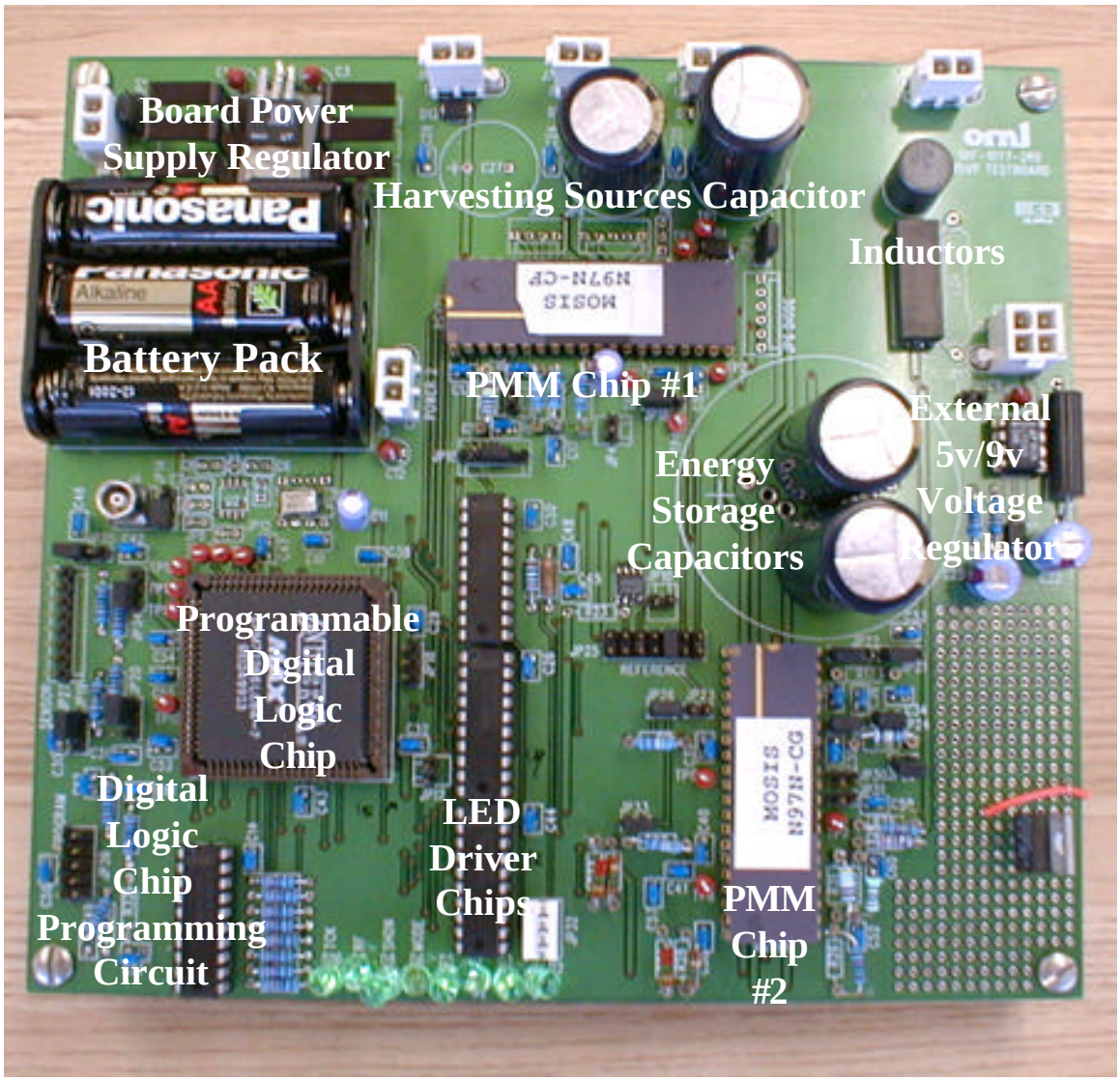

Figure 23 First generation power management module

A second generation power management module was developed with an ASIC that included all of the elements described earlier, except for the control logic. This logic was left external and in a PLD. This allowed for making changes to the logic, but is not a long-term solution as the power requirement of the PLD is a sizeable fraction of a watt. This second generation power management module is shown in Figure 24. The overall size is greatly reduced and two 40-pin DIP ASICs are reduce to one 44-pin PLCC. Some components, such as the battery pack and the 10,000 microfarad capacitors are mounted on the rear of the printed circuit board.

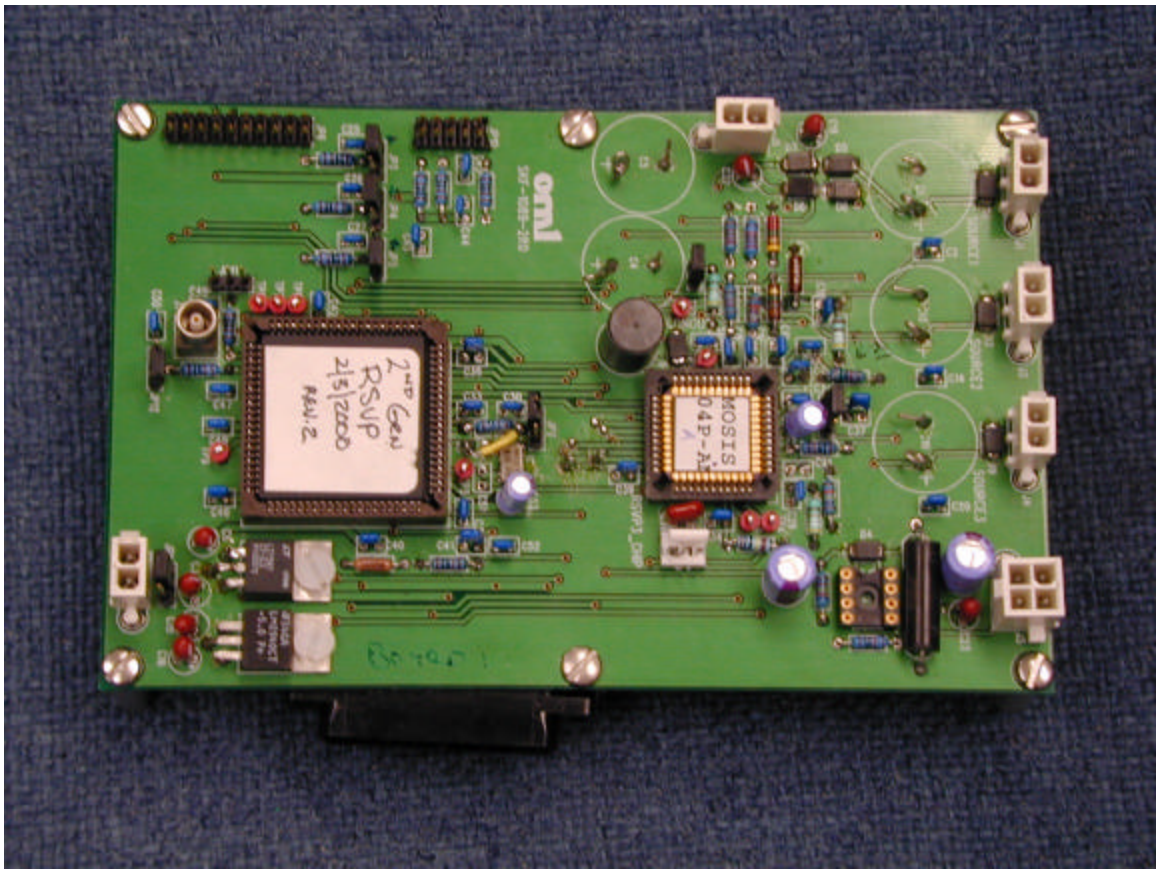

Figure 24 Second generation power management module

Finally the logic was incorporated into the ASIC, and a third generation power management module was constructed. This is shown in Figure 25. As before, the battery pack and the rather large filter capacitors are mounted on the back of the board. This is shown in Figure 26. Figure 27 shows a close-up of the ASIC.

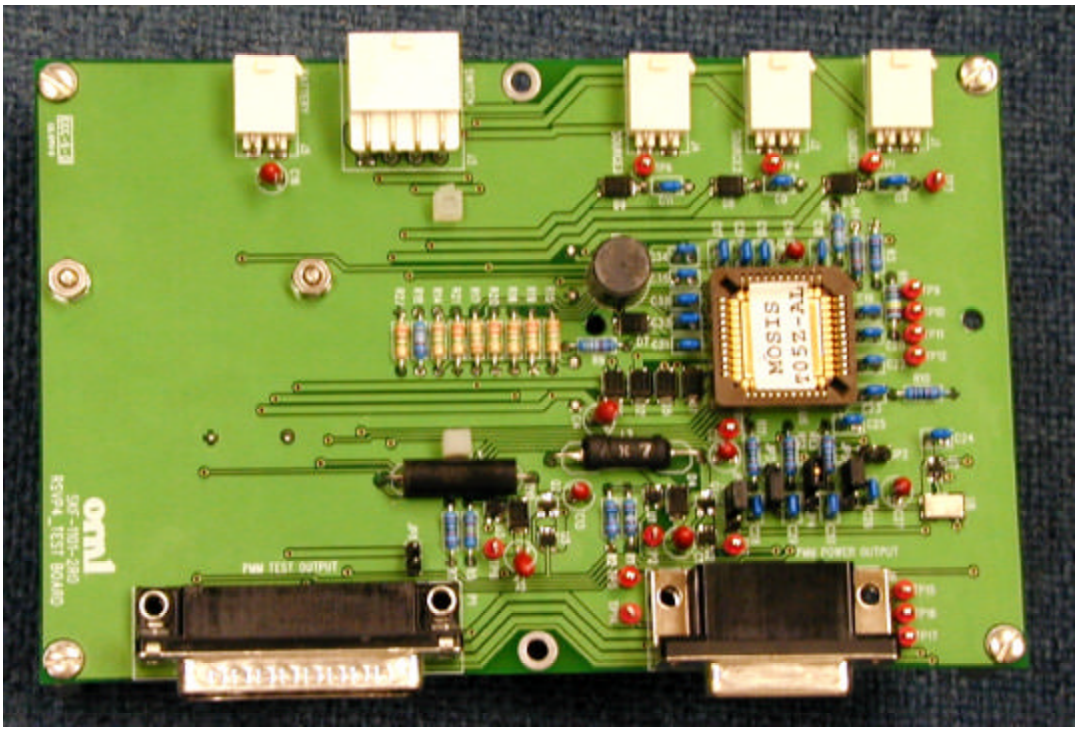

Figure 25 Third generation power management module front view

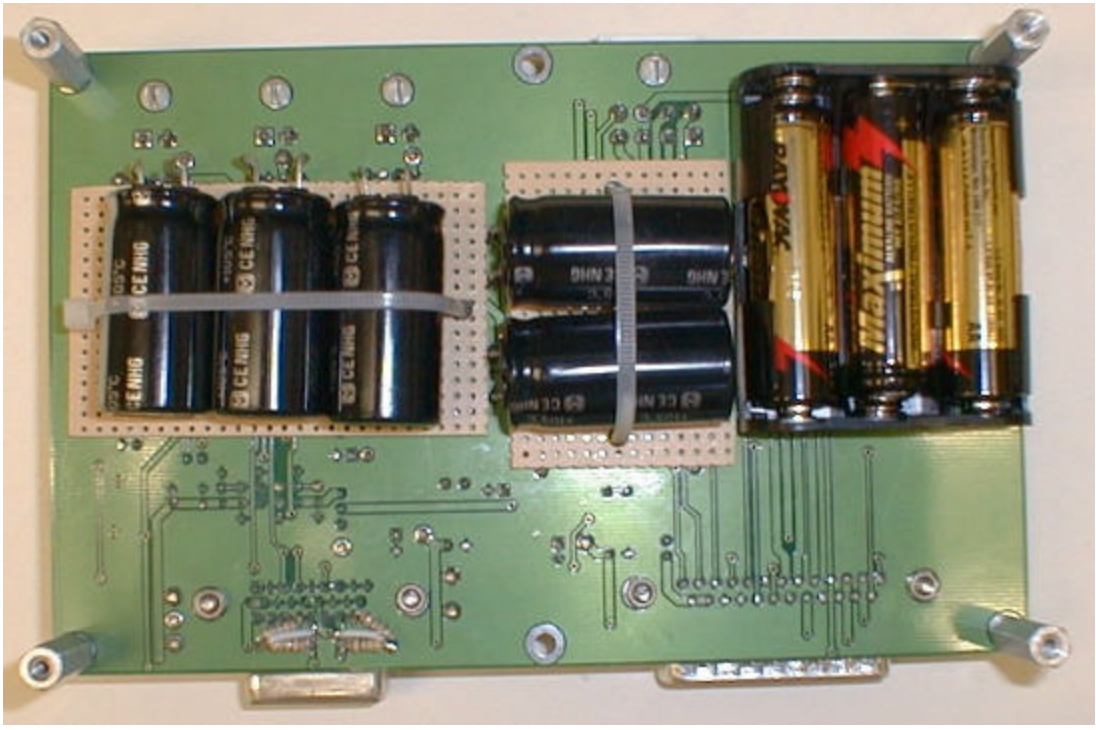

Figure 26 Third generation power management module rear view

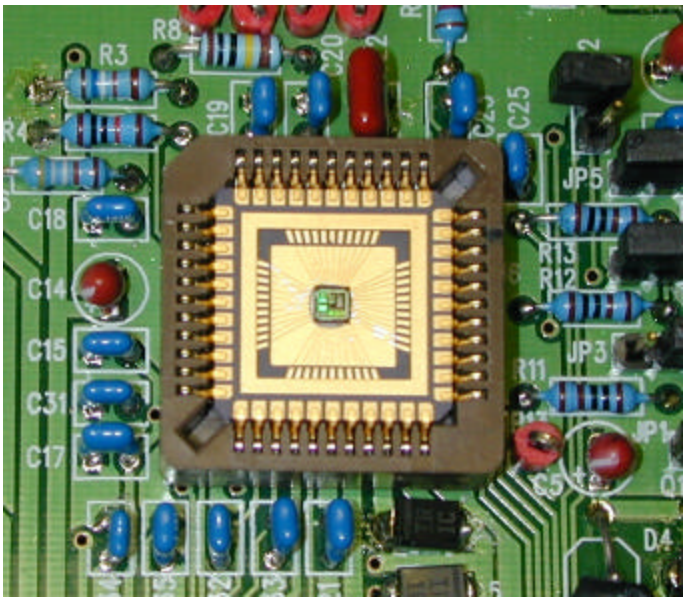

Figure 27 Close-up of the power management module ASIC

To simulate the rest of the sensor cluster and to facilitate testing of the power management module, a load test board was developed and fabricated. It provides the logic signals that would ordinarily come from the processor module and draws power at the levels expected. It also allows monitoring a number of voltages and currents important to the operation of the power management module. (Source voltage and current, load power and current, etc.) It also displays some of the key logic states of the power management module. This board and the battery box associated with it are shown in Figure 28. Figure 29 shows the load test board connected to the power management module. The circular cable is the normal connection to the rest of the sensor module, while the ribbon cable and associated connectors are used by the load test board only.

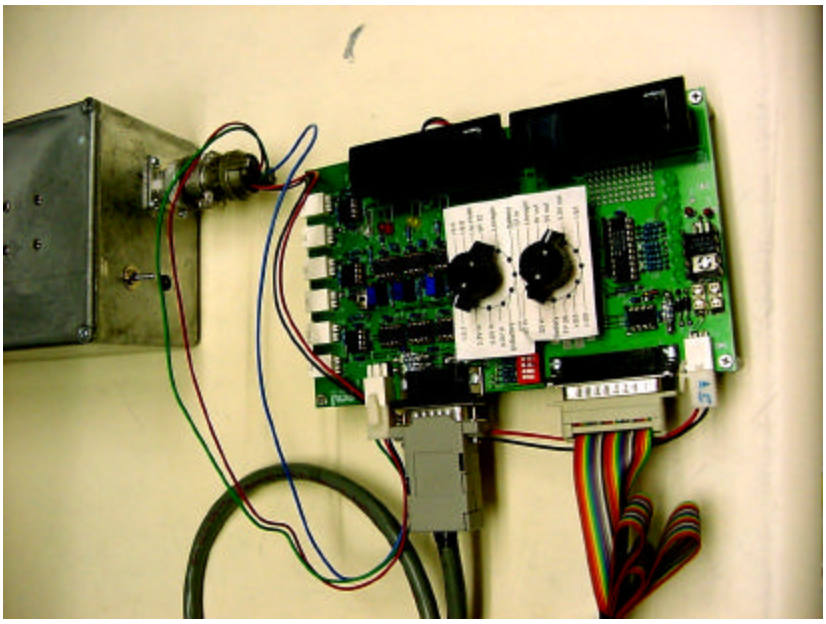

Figure 28 Load test board and battery box

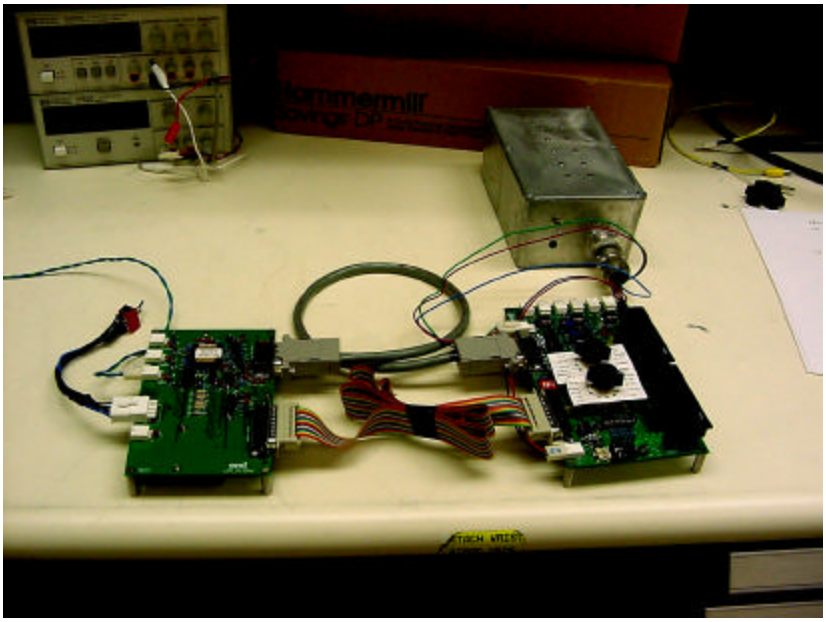

Figure 29 Power management module and load test board

4.1.12 Structural Sensors

Each RSVP Structural Cluster consisted of a radio board, a power management board and sensor connection serial ports. The radio board and power management board were described and discussed in Sections 4.1.8 and 4.1.9. This section will focus on the structural sensor types and the reasoning for their selection including the possible implementation philosophy for full RSVP shipboard installation.

Each RSVP Structural Cluster contained 3 accelerometers and 2 strain gages. The 3 accelerometers were IC Sensors Model 3145-002 and 3140-100, similar to those illustrated in Figure 1 and had ranges of 2 G's and 100 G's. The strain gages were Sarcos Research Corporation Uni-Axial Strain Transducers (UAST) illustrated in Figure 2.

Figure 30 IC Sensors Model 3140 Accelerometers

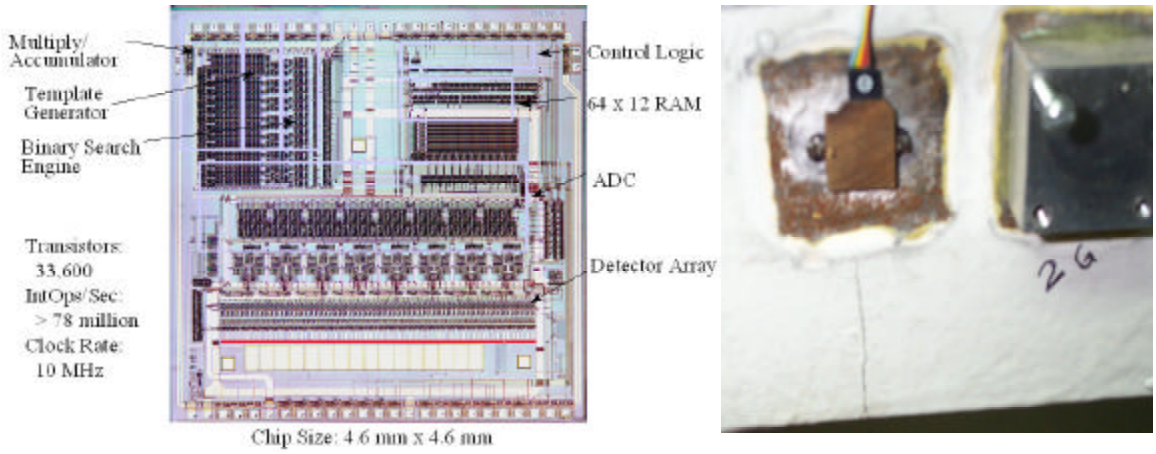

Figure 31 Sarcos Research Corporation Uni-Axial Strain Transducer (UAST) schematic and installation

The Structural Cluster consisted of packaging for the radio and power management boards, three IC Sensors accelerometers and two Sarcos Research Corporation Uni-Axial Strain Transducers (UAST). Installation onboard the USS MONTEREY (CG-61) is shown in Figure 3.

Figure 32 RSVP Structural Cluster (including sensors) installed onboard USS MONTEREY (CG-61)

Onboard USS MONTEREY (CG-61) the Structural Clusters and their associated sensors were installed on continuous longitudinal shell (T-beam) stringers. Ideally this installation would have been most effective if it were installed on the ship's center vertical keel (CVK). This location would have produced the most useful acceleration and strain/stress information for determination of the ship's hull condition from both a long term trending perspective (corrosion and deterioration) as well as from a more instantaneous battle damage assessment. Additionally, information from the CVK could be correlated to ship's bending moments and other design specifications therefore establishing a baseline comparison capability. But due to the inaccessibility to the CVK the next closes longitudinal was selected and it was more than sufficient to demonstrate the technology to measure /communicate/process the structural data and exemplify the extreme usefulness of this data (as described in the demonstration and full shipboard installation paragraphs below).

For the USS MONTEREY (CG-61) at-sea demonstration of the Structural Clusters ability to measure, communicate and process data into knowledge, the accelerometers were utilized to measure acceleration due to seaway forces as well as simulated "shock" excursions. The seaway forces that were produced naturally by the motion of the ship and were measured by the 2 G range accelerometers. The "shock" excursions were simulated by utilizing an Instrumented Modal Hammer to impact the structure (near the location of the accelerometer) and measure the response with the 100 G range accelerometer. Similarly, the strain transducers were utilized to measure strain/stress of the structural member due to seaway forces as well as simulated damage conditions by using a constant strain apparatus to drive the strain transducer to its highest measuring range. This

constant strain apparatus utilizes a triangular titanium plate to develop the most strain without undergoing high deformation and is illustrated in Figure 4.

Figure 33 Constant Strain Apparatus

For the USS MONTEREY (CG-61) in-port VIP day demonstration of the Structural Cluster the 2 G range accelerometers were attached to a structure that simulated medium to severe seaway motion/forces. This seaway motion/force simulation device is illustrated in Figure 5.

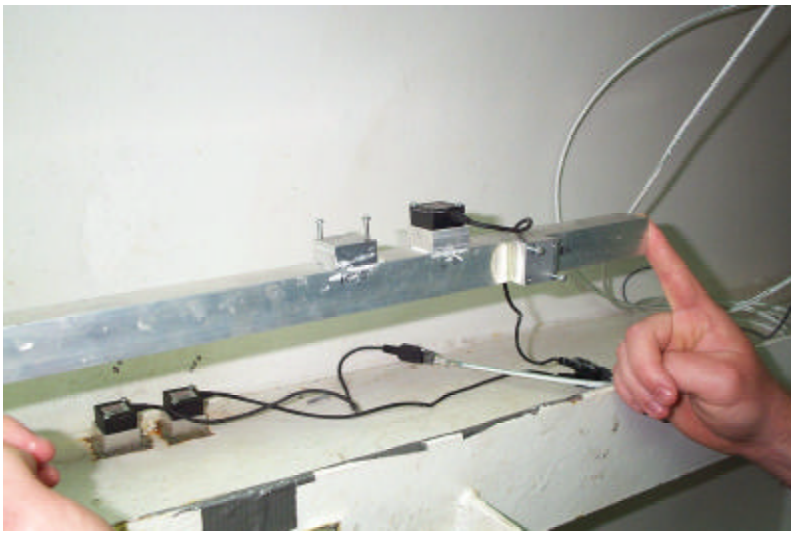

Figure 34 Seaway Motion/Force Simulation Device

The preceding explanation and description of the Structural Cluster and associated sensors more than sufficiently demonstrated the availability of technology to measure, communicate, and process structural data. The subsequent amplification further exemplifies the acute usefulness of this data in realistic shipboard scenarios.

As a minimum, in a full shipboard RSVP installation, tri-axial hull accelerometers and strain transducers would be used for the following fundamental reasons.

First is to quantify peak amplitude and duration time of G forces from a Shock excursion both at the location of the first (shock wave) contact and along the propagation to equipment and machinery locations throughout the ship. This information is essential because as the shock wave travels through (deforming) decks and bulkheads significant attenuation of the peak amplitude will occur. Being able to confirm G forces and stress levels encountered by critical (or even non-critical) equipment, machinery, and weapons systems will permit the ship to determine if any systems have exceeded their G force or stress level specifications and therefore may not be "certified" for further use impacting the readiness of the ship (and possibly the Battle Group) to continue its current operation. There are many other similar scenarios of this type that illustrate the need for the ship to have reliable structural information to make informed damage assessment and damage control decisions.

Second is to have total situational awareness of G forces and stress levels during critical damage control situations such as counter-flooding, fire suppression, damage containment including deck, bulkhead and hull stability, and additionally the reactions associated with these initial actions. Again there are many other similar scenarios of this type that illustrate the need for the ship to have reliable structural information to make informed damage assessment and damage control decisions.

Third is to quantify peak amplitude and duration time of G forces from seaway forces and to correlate them to hull strains/stresses and eventually to sea state equations utilized for foundation and structural designs. This type of pragmatic data and knowledge would not only result in shipboard structural situational awareness, but would validate many design and engineering specification documents used for ship design and construction.

4.1.13 Power Harvesting

4.1.13.1 Vibration-to-Electric

RSVP leveraged the work performed in the Phase 1 SBIR OSD99-08, performed by MJR Scientific Corporation, Salt Lake City, UT. MJR was tasked to develop two transducers for RSVP to demonstrate energy harvesting from a vibration source. The ultimate goal of this work has been the demonstration of the feasibility for the development of energy harvesting from all types of machines and structures to facilitate wireless operation of sensors in use in Condition Based Maintenance (CBM) systems.

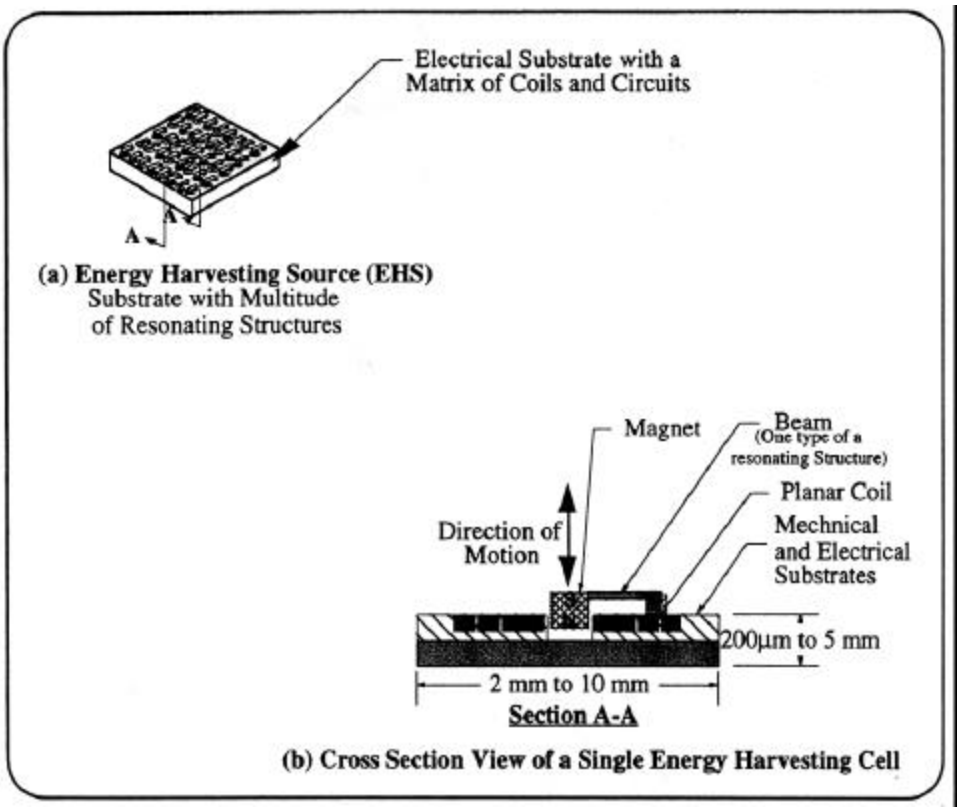

Figure 35 Energy Harvesting Source

MJR proposed the development of a small device capable of providing power for each sensor and associated communication circuits for wireless transmission of the sensor data to a central processing station onboard a ship. The aim of the work was the development of a small Energy Harvesting Source (EHS), which may be installed with or next to each sensor to provide electrical power needed by the sensor and its RF communication circuits.

An Energy Harvesting Source (EHS, shown in Figure 35), consists of a matrix of simple energy harvesting cells (Figure 35 (a)). A basic component of each cell is a small permanent magnet supported with a Miniature Resonating Flexure (MIZE). MRF (Figure 35(b)) is located such that the magnet is suspended at the center of an electrical conductor in a shape of coil (planar or three dimensional). When attached to the host structure, MIZE will be excited by the vibration of the frost structure causing it to resonate. The relatively large amplitudes of the motion created by MRF, at the frequency of the operation of the machine, is used to oscillate the magnet at the center of the coil. The motion of magnet induces electromotive force (EMF) in the coil and the flow of electrical current in the coil.

A single EHS consists of a matrix of such similar cells and electrically connected together to increase the quantity of the harvested energy. This approach is ideal for the development of energy harvesting technology for all types of machines which run at one or range of frequencies. The harvested energy may be stored on a capacitor or used to charge a battery cell for use by the sensor and the RF communication circuit for transmission of the sensor data.

Two EHS devices were constructed of three main simple components. These include: 1) a substrate with tolls and basic electrical circuits; 2) flexure combined with magnetic materials; and 3) a package for protection of the EHS.

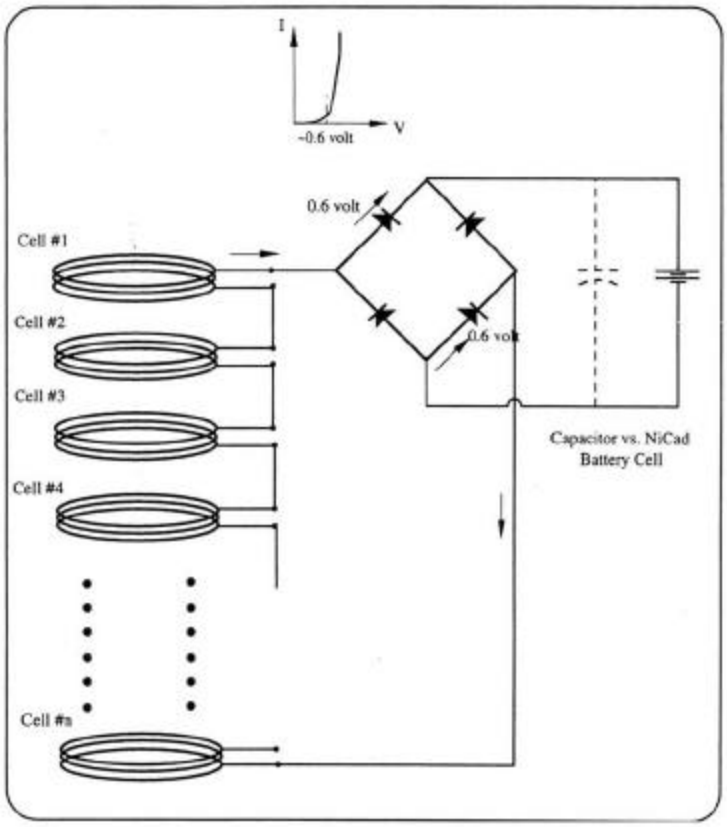

Figure 36 A Simple Connection Of Coils In Series And A Diode Bridge For Voltage Conversion

The series connection of a number of cells allows for the summation of their potentials above the battery's potential (e.g. about 1.25 volts for NiCad cell) required to charge the battery. Optionally, the energy may be stored on a capacitor.

Both devices built for RSVP were designed for operation at a vibration level of 1g at 1000 rad/sec . The two transducers were also used to show the summation of induced electrical voltage by each device as a means for increasing the harvested energy by a number of transducers. The vibration transducers were designed, constructed and tested before delivery to the RSVP for demonstration. The work performed included a large amount of electromagnetic simulation and optimization of the transducer design. In addition, an extensive amount of testing was completed to validate the performance of the transducers each separately and together on a hand-held vibration table.

The first transducer was tuned to an excitation frequency of 1000 rad/sec and when tested at 1g it induced about 1volt. The second transducer was tuned to a slightly lower frequency to show addition of potentials (by connecting the transducers in series) while both devices were excited together. The performance of both devices was validated by MJR.

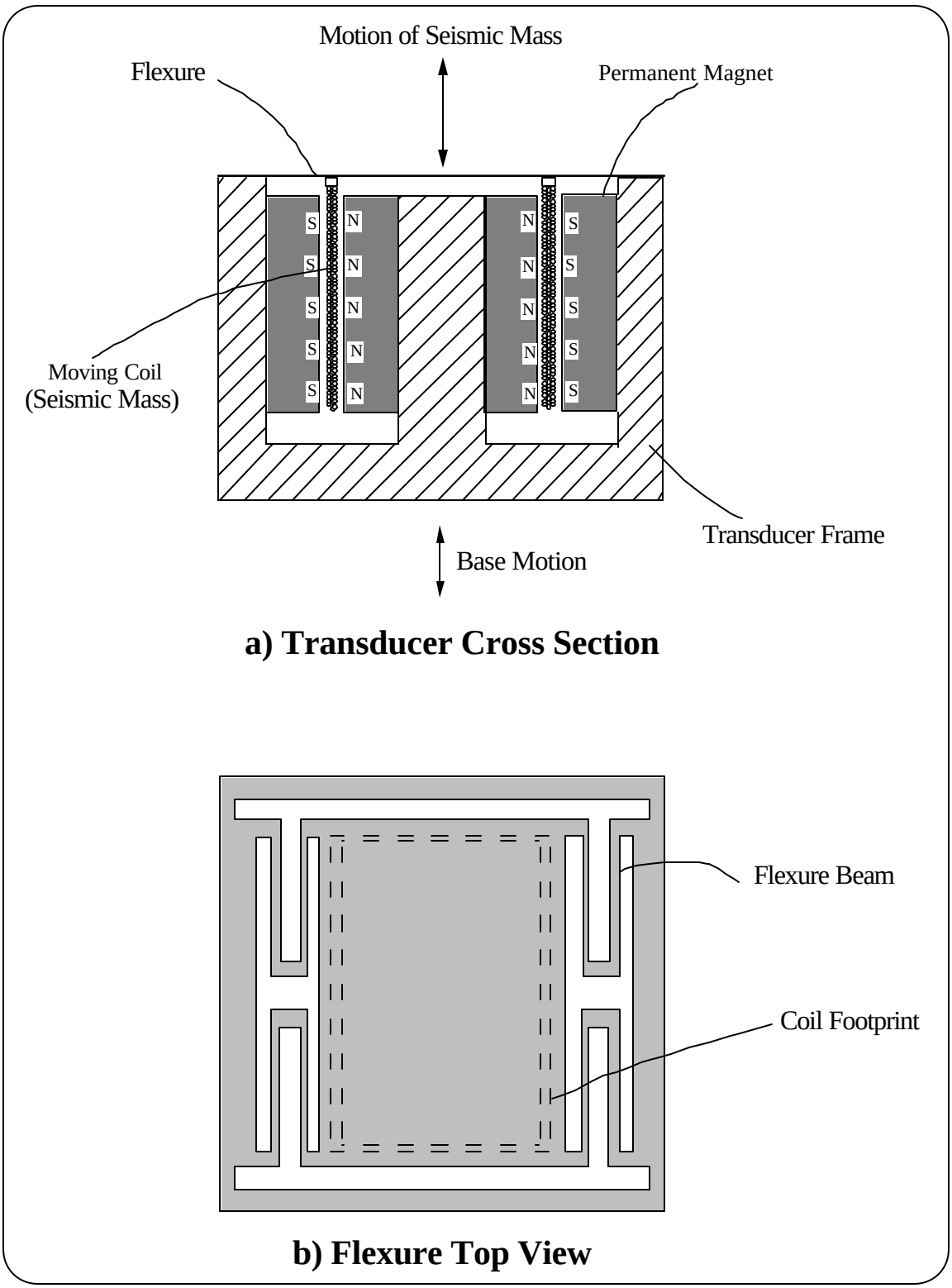

Figure 37 Transducer Construction With A Moving Coil As A Seismic Mass

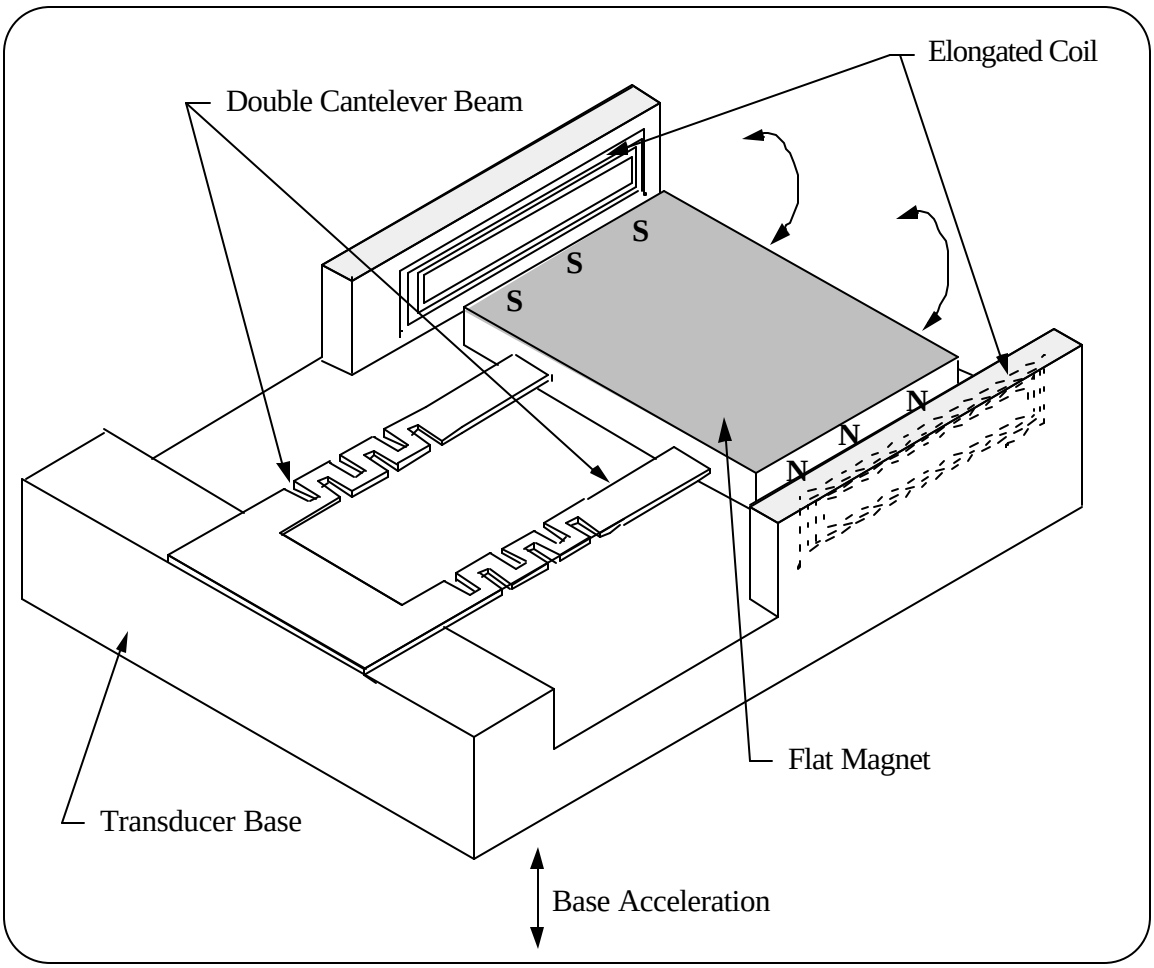

Figure 38 Transducer Construction With A Moving Magnet As A Seismic Mass

Since the conclusion of RSVP, MJR has been pursuing the development of energy harvesting transducer with its own resources. The highlights of this work include:

1. A draft copy of patent application for the transducer has been completed.

2. A new transducer design is underway to increase the induced voltage at lower machine vibration levels (0.05 g at 30 Hz) to 5 to 7 volt. The new transducer design will be tested by the end of November.

3. A method has been found to eliminate the use of voltage amplification circuits needed to charge a battery cell.

4.1.13.2 Thermo-to-Electric

RSVP tasked Hi-Z Technology, in San Diego, CA. to develop a thermo-electric power harvesting device. A thermoelectric generator was designed, fabricated and installed to harvest energy freely available on board ship. The generator uses the 5°C differences between the temperature of the space inside of the ship and the ship's hull.
The Energy Harvesting generator is used to charge a capacitor to at least 4.5 Volts. The capacitor is used to power a sensor package, supplied by others, and periodically transmit the data obtained wirelessly to a central command point.

The design consisted of a large number of thermoelectric couples that were required to produce the 3.5 to 4 Volts required. The 40 mW thermoelectric module chosen measures 0.292" x 0.292" x 0.9" and operates between250 C and 25 C in the RTG configuration. A picture of the 40 mW module is shown in Figure 39.

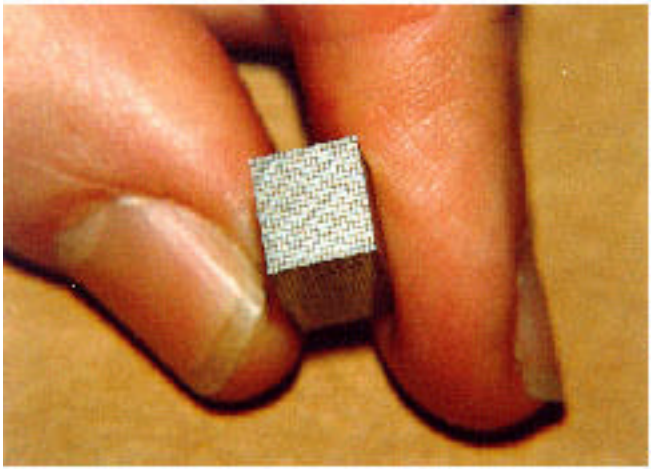

Figure 39 40 mW Thermoelectric Module

A large array of modules were developed into an energy harvesting generator. The energy harvesting generator was installed aboard CG-61 in MER #2, against the interior of the ship's hull - Figure 40. The hull, which is cooled on the outside by the surrounding ocean water, acted as the heat sink. The ambient air, within the engine room space, is the heat source. The energy harvesting generator was connected to the PMM during the RSVP At-Sea demonstration.

Figure 40 RSVP Thermoelectric Energy Harvesting Generator Installed on CG61 USS MONTEREY

The complete details on the design and development of the thermo-electric energy harvesting generator are contained in the “Energy Harvesting Thermoelectric Generator Final Report” [ref 12].

4.2 Machinery Health Monitoring System

4.2.1 Overview

This section describes the functions and capabilities of the Machinery Health Monitoring System (HMS) developed and demonstrated during the RSVP ATD. The HMS employs hardware and software in a multi-layer, distributed, hierarchical architecture that monitored portions of one Ship Service Gas Turbine Generator (SSGTG). The hardware and software elements include sensors, data acquisition, signal conditioning, data analysis, archival/retrieval, and control, and two-way RF communication. The Intelligent Component Health Monitor (ICHM) provides component/subsystem level monitoring while the System Health Monitor (SHM) combines ICHM information into a higher-level system view. An overview of the HMS is shown in Figure 41.

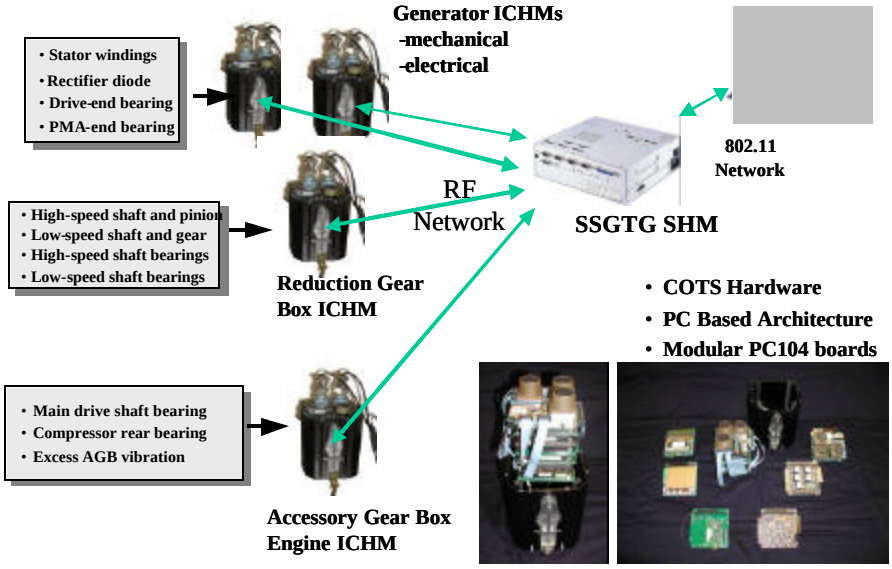

Figure 41 Machinery Health Monitoring System

4.2.1.1 System Health Monitor (SHM)

The System Health Monitor (SHM) integrates data from multiple ICHMs and other sensors to monitor the health of subsystems and provide a system level perspective. The SHM performs complex signal processing, data fusion, and approximate reasoning that *will eventually* lead to predicting the remaining useful life of the monitored equipment. Communication with the ICHM and AP is accomplished via two independent wireless RF links. The SHM serves as a repository of machinery data/information and services data/information requests from the Watchstation. Requests for lower level data are also handled by the SHM through messages requests directed to the ICHMs. SHM diagnostics consist mainly of internal processor operation check and communication connectivity with the AP and ICHM.

4.2.1.2 Intelligent Component Health Monitor (ICHM)

A set of four Intelligent Component Health Monitors (ICHMs) monitor portions of the SSGTG's four main subsystems; the turbine, accessory gearbox, reduction gearbox and generator. System configuration includes one ICHM for the turbine and accessory gearbox, one for the reduction gearbox and two ICHMs for the generator; one electrical and one mechanical. The ICHMs include multiple sensors and processing capability designed to monitor mechanical components such as bearings, gears, motors, and other mechanical components and detect phenomena such as acceleration, temperature, current, voltage and other observable parameters. Processing on each ICHM integrates the sensor data and determines health and status of the component being monitored. Self-diagnostics includes sensor fault detection, temperature, system processor operation, and communication link quality. The ICHM reports to the SHM on an exception basis (alerts and alarms), services and responds to requests from the SHM, and provides a component health-status vector at set intervals.

The sensed parameters associated with the four ICHMs are as follows:

<u>Generator (Electrical)– ICHM #1</u>

- Current Output – Phase A
- Current Output – Phase B
- Current Output – Phase C
- Voltage Output – Phase A
- Voltage Output – Phase B
- Voltage Output – Phase C
- Exciter Voltage
- Exciter Current

Generator (Mechanical)– ICHM #2

Bearing Vibration – Drive End
Bearing Temperature* – Drive End
Bearing Vibration – Drive End
Bearing Temperature* – Drive End
Bearing Vibration – Pma End
Bearing Temperature* – Pma End
Bearing Vibration – Pma End
Bearing Temperature* – Pma End

*from vibration sensor (internal temperature sensor)

Reduction Gearbox – ICHM #3

Bearing Vibration 1 - High Speed Shaft Drive-End
Bearing Temperature 1 - High Speed Shaft Drive-End
Bearing Vibration 2 - High Speed Shaft Non-Drive-End
Bearing Temperature 2 - High Speed Shaft Non-Drive-End
Bearing Vibration 1 - Low Speed Shaft Drive-End
Bearing Temperature 1 - Low Speed Shaft Drive-End
Bearing Vibration 2 - Low Speed Shaft Non-Drive-End
Bearing Temperature 2 - Low Speed Shaft Non-Drive-End

Turbine/Accessory Gearbox – ICHM #4

Engine Module Temperature
Compressor/Engine Surface Temperature*
Compressor/Engine Vibration
Bearing Vibration – Vertical
Bearing Vibration – Horizontal X
Bearing Vibration – Horizontal Y

*from vibration sensor (internal temperature sensor)

4.2.2 Hardware and Software Requirements

The general system hardware and software functional requirements for the SHM and ICHM are:

- Data acquisition, processing, and communications control
- RF communications
- Data fusion and archiving
- Open architecture/interfaces
- Scalability
- Application of machinery diagnostics

The drawing in Figure 42 shows the key functional components of the SHM and ICHM. The ICHM includes sensors, signal-conditioning electronics, analog-to-digital conversion, a processor to control data acquisition and to process data, and a radio to provide wireless communication to the SHM. ICHM software controls data acquisition, processes data, performs data fusion on data from the ICHM sensors, determines the health of the monitored component, and communicates data and health messages to the SHM. The SHM must communicate wirelessly with ICHMs and Access Points, provide data archiving and database management, perform data fusion on information from the ICHMs, and control the operation of the ICHMs it is responsible for.

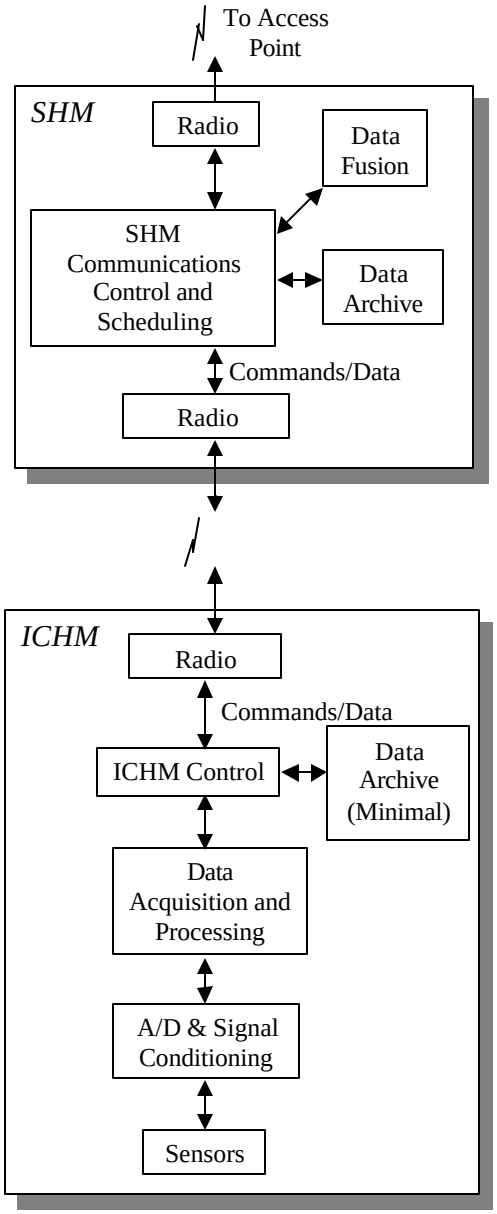

Figure 42 Functional Components of SHM and ICHM

4.2.2.1 ICHM Functionality and Capability

The ICHMs monitor and assess the health of a machinery component. In very broad terms, the ICHM must sense and measure physical parameters, make some decision about the condition of the component based on the measurement, and communicate the results of that measurement and decision to the SHM. Other requirements for this device include autonomous wireless operation, self-test, and calibration. The ICHM is field programmable to permit upgrades to data analysis and other functions. The ICHM is (mostly) digital, and includes sufficient processing power to support data acquisition, analysis, communication, and ICHM control.

Specific functions of the ICHM include:

- Data acquisition, including:
  - Parameter sensing (e.g., temperature, pressure, vibration)
  - Signal conditioning (e.g., sensor power, filtering, amplification)
  - Data conversion (multiplexing, A/D conversion)
  - Acquisition control (synchronization, timing, sequencing)
  - Data analysis and alerts
  - Communication (receive control and synchronization messages from SHM, transmit data and alerts to SHM)
- System support, including:
  - System control (control communication, data acquisition, data analysis, system clock)
  - Software support (ROM, RAM, program loader)
  - Power management
  - Self-test (ICHM self-diagnostics, watchdog timer control)
  - Physical interfaces (sensor attachment, operator control, cabling, module interconnect, etc.)

A generalized block diagram of the ICHM is shown in Figure 43.

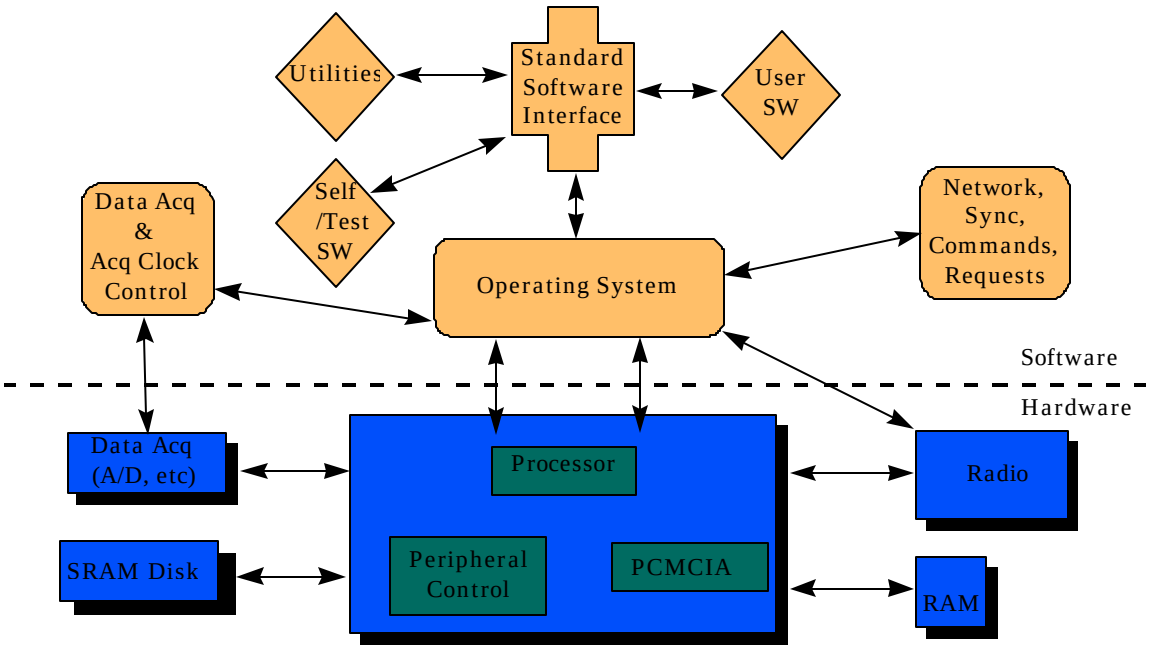

Figure 43 ICHM Block Diagram

The ICHM module contains a host processor and a data acquisition board that controls the acquisition, processing, and transfer of data via a standard set of processing and I/O functions. The ICHM is field-configurable and adaptable offering upgrade flexibility to a variety of applications over time. To support a variety of machinery health monitoring scenarios, the device software structure provides an easy-to-use interface to acquisition and processing functions. An assortment of tools is provided to allow rapid development and integration of new processing tools as they become available. The system software employs a multitasking environment that permits the installation of individual user processes on top of a system structure providing utilities required for algorithm development. This structure eliminates the need for the diagnostic algorithm developer to modify underlying support software to support communications, self-tests, and resource management.

The ICHM provides data acquisition, processing, and wireless network hardware and software to accomplish the conditioning, digitization, acquisition, calibration, and local processing sensor data. Initially, temperature, pressure, vibration, and tachometer measurement types will be supported. The configurable acquisition module design supports a wide variety of measurements including; temperature, pressure, vibration, tachometer, current, voltage, strain, position, etc. The ICHM supports the varied dynamic range, signal conditioning, and data bandwidth requirements of a variety of sensing elements. This includes support for different sample sizes up to 12 bit and associated transfer rates.

4.2.2.2 SHM Functionality and Capability

The SHM monitors and assesses the health of an entire system using the resources of its associated ICHM nodes. Certain types of analysis may require that measurements from several ICHMs be acquired simultaneously; therefore, a means of temporal synchronization by the SHM across ICHMs may eventually be required. This type of ICHM synchronization was not implemented as part of the RSVP demonstration system. The SHM, like the ICHM is field-programmable to permit upgrades to the system-level machinery diagnostic and prognostic functions. Like the ICHM, the SHM is (mostly) digital, with sufficient processing power to support data acquisition, analysis, communication, ICHM control, and higher-level system-wide functions, such as context-based reasoning, data archival and management, and dynamic system modeling. SHM support functions include power, self-test, and physical interfaces. Figure 44 illustrates the functional organization of the SHM.

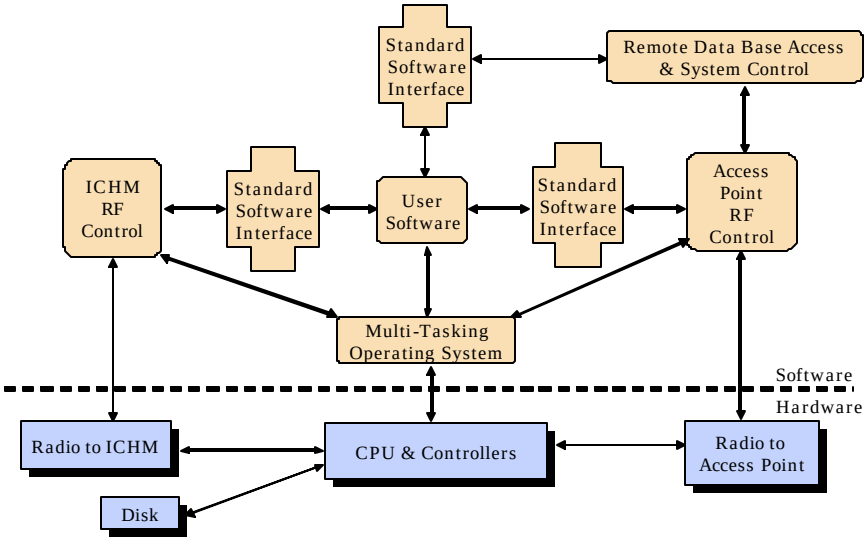

Figure 44 SHM block diagram

The general requirements for SHM functionality include:

- Feature-level and decision-level data fusion
- Support for algorithms or programs to confirm or further process available data, such as automated context-based reasoning, neural networks, fuzzy logic, and dynamic system models
- Data archival and management for large amounts of data
- RF communications to the ICHM via Open Air Standard wireless Ethernet radio
- RF communications to the Access Point via 802.11 compliant Ethernet radio

- Network-configurable software throughout the system allowing rapid software upgrades and fixes as well as algorithm updates
- Scaleable, extensible, portable, and reusable architecture
- Low risk COTS hardware
- Support for NDDS communications with AP and Human Computer Interface at the Watchstation

Note: System level (SSGTG) data fusion was not incorporated into the SHM as part of the RSVP demonstration because of limitations/restrictions associated with installing additional sensors or accessing existing sensor signals on the SSGTG from the machinery control system aboard the demonstration ship.

4.2.2.3 HMS Architecture

The hardware and software architecture is designed to be expanded or reduced as appropriate to meet the specific requirements set forth by the system-level application(s). The operating system and developmental software supports migration toward new processors and peripherals. Local data archival of acquired data supports system-level trending as well as context-based reasoning of acquired and processed data results. Designed into the HMS but not implemented for the demonstration, the system automatically ages acquired and processed results in order to manage the local database. Aging consists of discarding older data as it becomes obsolete, based on the type of data and standard aging algorithms. All data collected during the demonstration period was archived to aid in analysis of the HMS performance.

4.2.3 Hardware

4.2.3.1 Overview

The Machinery Health Monitoring System consists of three primary components; sensors, Intelligent Component Health Monitors (ICHM), and a System Health Monitor (SHM). Installation and Ship's interface hardware include power supplies, an instrumentation interface box for sensors attached to the SSGTG and associated brackets for mounting the hardware. In order to meet strict guidelines for installing temporary equipment on the SSGTG skid, the HMS hardware was designed to provide a straightforward means of installation and removal without altering the SSGTG skid. Upon removal of the HMS system the SSGTG skid was returned to its original condition.

As such the instrumentation interface box, power supply cabinet, and power supplies were designed specifically for the shipboard prototype installation. A final/permanent installation would be more integrated with the SSGTG skid and somewhat simplified. Specifically, power would come from on the skid thereby eliminating the need of the four power supplies supporting the HMS as well as the rather large cabinets containing them. The sensors themselves would become integrated with the SSGTG sensor suite, eliminating the need for the instrumentation interface box.
General locations of the HMS hardware is shown in Figure 45. Primary components are shown in green, while installation specific components are shown in blue. Detailed installation and removal plans develop as part of the Interim Logistics Support (ILS) Package were reviewed and approved by NSWCCD codes 9332 and 9334 prior to installation at LBES and on the ship.

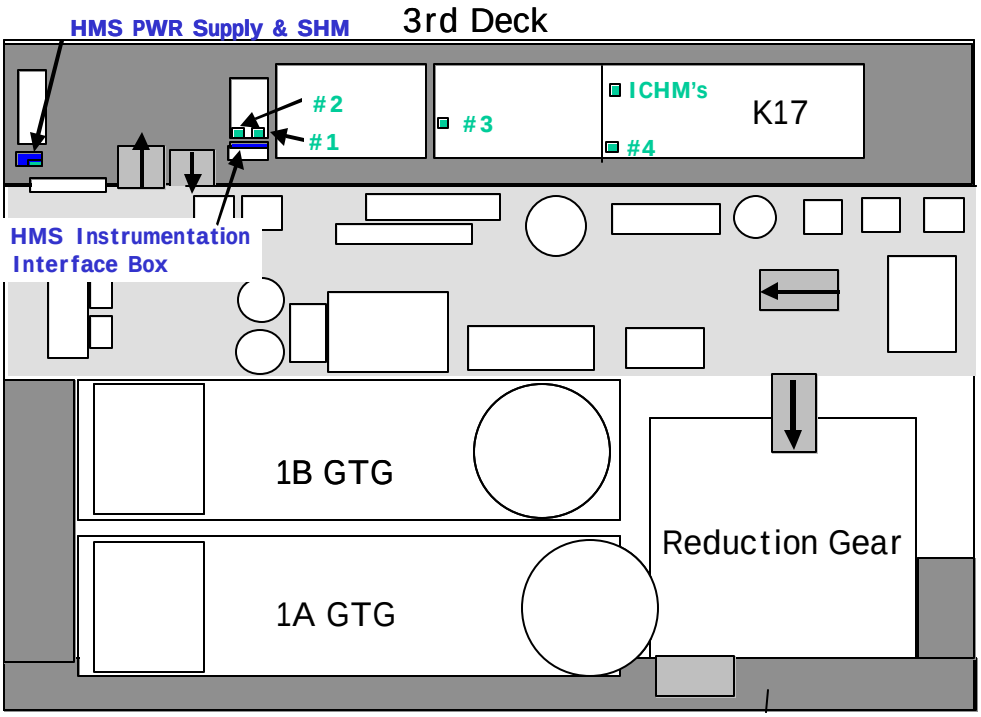

Figure 45 HMS Hardware Installation Locations

4.2.3.2 Sensors

All sensors used for the HMS system were commercially available. Locations of sensors installed on the SSGTG are shown in Figure 46. Sensors associated with each ICHM are described in Table 12, Table 13, Table 14, and Table 15.

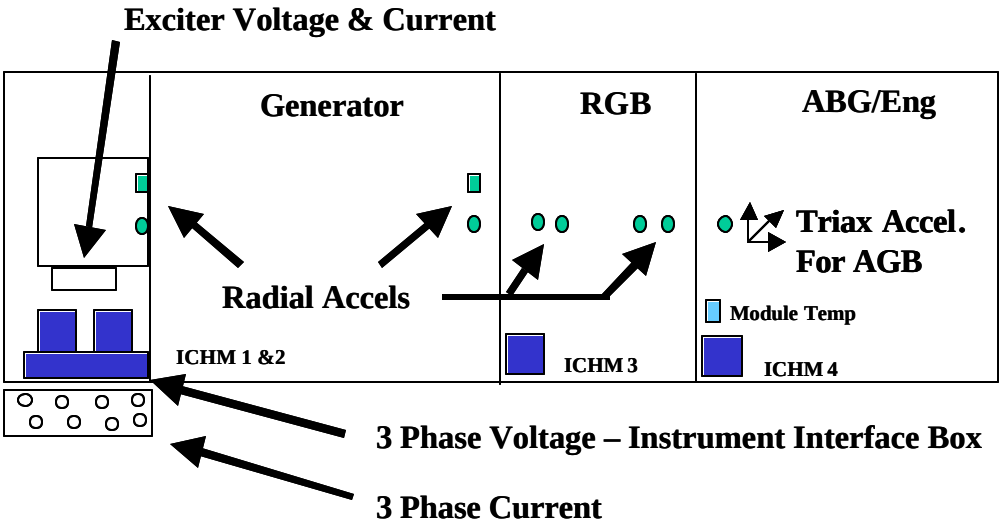

Figure 46 HMS SSGTG Sensor Location

Table 12 Generator Electrical Sensors - ICHM #1

Component	Signal	Frequency Range (Hz)	Sensor/Source	Type	Location
Generator Electrical	Output voltage (Phase A)	30 - 2000	Isolated voltage divider	LT 505	Signal – SSGTG main buss Location – Instrumentation box
	Output voltage (Phase B)	30 - 2000	Isolated voltage divider	LT 505	Signal – SSGTG main buss Location – Instrumentation box
	Output voltage (Phase C)	30 - 2000	Isolated voltage divider	LT 505	Signal – SSGTG main buss Location – Instrumentation box
	Output current (Phase A)	30 - 2000	Current transformer	CV3-1000	SSGTG buss panel
	Output current (Phase B)	30 - 2000	Current transformer	CV3-1000	SSGTG buss panel
	Output current (Phase C)	30 - 2000	Current transformer	CV3-1000	SSGTG buss panel
	Exciter Voltage	DC – 2K	Isolated voltage divider	LTS 15-NP	Exciter junction box
	Exciter Current	DC – 2K	Current transformer	CV3-200	Exciter junction box
	ICHM Temp	DC – 1K	Temperature board	ARL designed and fabrication	Integrated with filter board – internal to ICHM

Table 13 Generator Mechanical Sensors – ICHM #2

Component	Signal	Frequency Range (Hz)	Sensor/Source	Type	Location
Generator Mechanical	Bearing vibration and temperature	10 – 10K	Accelerometer	IMI TO601 Ax1	Drive end – vertical radial
	Sensor health - bias voltage	DC – 1K	Filter board	ARL designed and fabrication	ICHM #2
	Bearing vibration and temperature	10 – 10K	Accelerometer	IMI TO601 Ax1	Drive end – horizontal radial
	Sensor health- bias voltage	DC – 1K	Filter board	ARL designed and fabrication	ICHM #2
	Bearing vibration and temperature	10 – 10K	Accelerometer	IMI TO601 Ax1	PMA end – vertical radial
	Sensor health - bias voltage	DC – 1K	Filter board	ARL designed and fabrication	ICHM #2
	Bearing vibration and temperature	10 – 10K	Accelerometer	IMI TO601 Ax1	PMA end – horizontal radial
	Sensor health - bias voltage	DC – 1K	Filter board	ARL designed and fabrication	ICHM #2
	ICHM Temp	DC – 1K	Temperature board	ARL designed and fabrication	Integrated with filter board – internal to ICHM

Table 14 Reduction Gear Box Sensors – ICHM #3

Component	Signal	Frequency Range (Hz)	Sensor/Source	Type	Location
Reduction Gear Box	Pinion/shaft vibration and temperature	10 – 10K	Accelerometer	IMI TO601 Ax1	High speed pinion/shaft – radial turbine end
	Sensor health - bias voltage	DC – 1K	Filter board	ARL designed and fabrication	ICHM #3
	Pinion/shaft vibration and temperature	10 – 10K	Accelerometer	IMI TO601 Ax1	High speed pinion/shaft – radial generator end
	Sensor health- bias voltage	DC – 1K	Filter board	ARL designed and fabrication	ICHM #3
	Gear/shaft vibration and temperature	10 – 10K	Accelerometer	IMI TO601 Ax1	Low speed gear/shaft – radial turbine end
	Sensor health - bias voltage	DC – 1K	Filter board	ARL designed and fabrication	ICHM #3
	Gear/shaft vibration and temperature	10 – 10K	Accelerometer	IMI TO601 Ax1	Low speed gear/shaft – radial generator end
	Sensor health - bias voltage	DC – 1K	Filter board	ARL designed and fabrication	ICHM #3
	ICHM Temp	DC – 1K	Temperature board	ARL designed and fabrication	Integrated with filter board – internal to ICHM

Table 15 Accessory Gear Box/ Turbine Sensors – ICHM #4

Component	Signal	Frequency Range (Hz)	Sensor/Source	Type	Location
Accessory Gear Box/ Turbine	AGB horizontal (x) vibration (athwart ship)	10 – 20K	Accelerometer	PCB 353 B16	AGB casing/tower shaft -triax block
	AGB vertical (y) vibration	10 – 20K	Accelerometer	PCB 353 B16	AGB casing/tower shaft -triax block
	AGB horizontal (z) vibration (longitudinal – fwd to aft)	10 – 20K	Accelerometer	PCB 353 B16	AGB casing/tower shaft -triax block
	Vertical vibration and temperature	10 – 20K	Accelerometer	IMI TO601 Ax1	Compressor inlet housing - vertical
	Sensor health - bias voltage	DC – 1K	Filter board	ARL designed and fabrication	ICHM #4
	ICHM Temp	DC – 1K	Temperature board	ARL designed and fabrication	Integrated with filter board – internal to ICHM
	AGB/Turbine module temperature	DC – 1K	Temperature sensor		Module overhead

4.2.3.3 ICHM

The ICHM hardware consists of PC104 form factor boards; CPU, power supply, PCMCIA Radio and Carrier, A/D Board, 5 Channel Filter Board and Connector Board – Figure 47. All boards are commercially available with the exception of the filter and connector boards - Figure 48 and Figure 49. These boards were designed and fabricated by ARL to support unique demonstration requirements. The PC104 boards are stacked and packaged in an environmentally sealed extruded aluminum container designed to accommodate PC104 form factor boards. The ICHM containers were modified to accommodate input power and external antenna mount for radio. In anticipation of high AGB/Turbine and RGB module temperature ICHM #3 and #4 were fitted with thermo-electric coolers. Temperatures experienced in both modules however proved to be within acceptable limits that would have allowed the ICHMs to operate without the thermo-electric coolers. An Internal ICHM sensor monitored the temperature as part of the HMS own health monitoring capability.

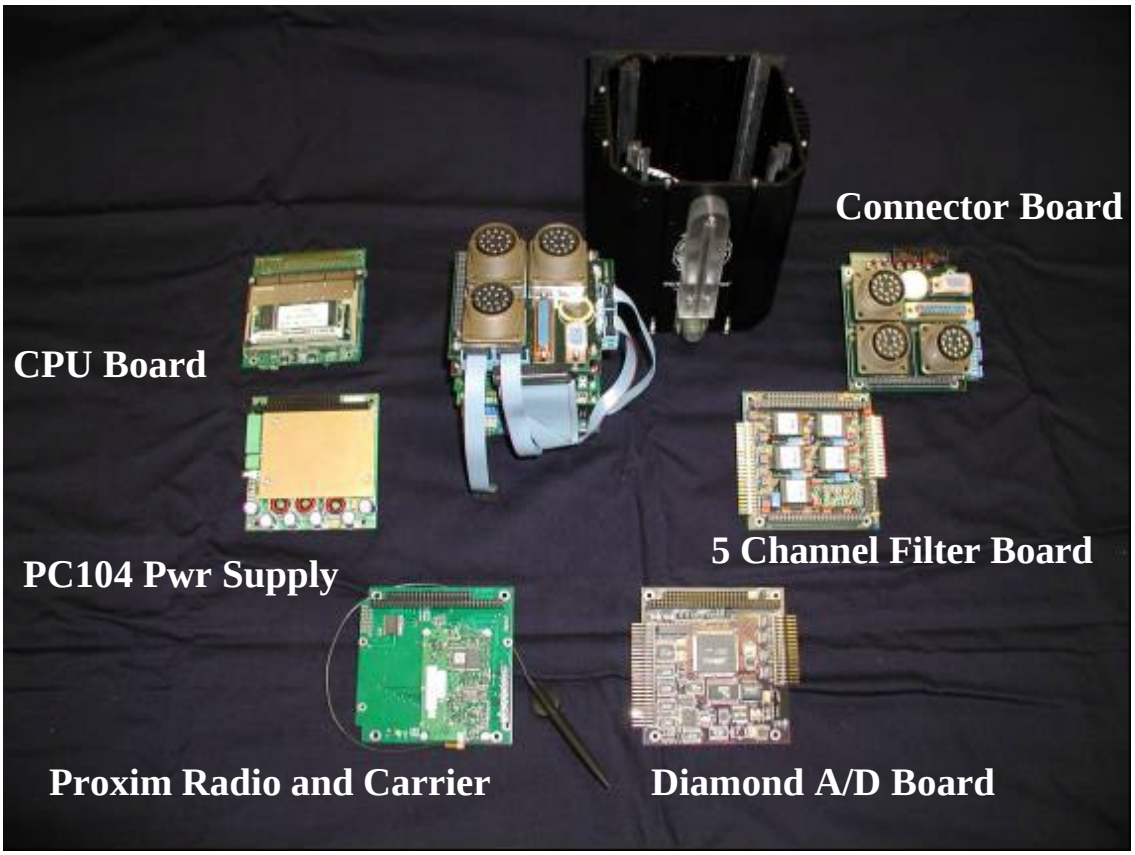

Figure 47 ICHM Hardware

4.2.3.3.1 Custom ICHM Boards

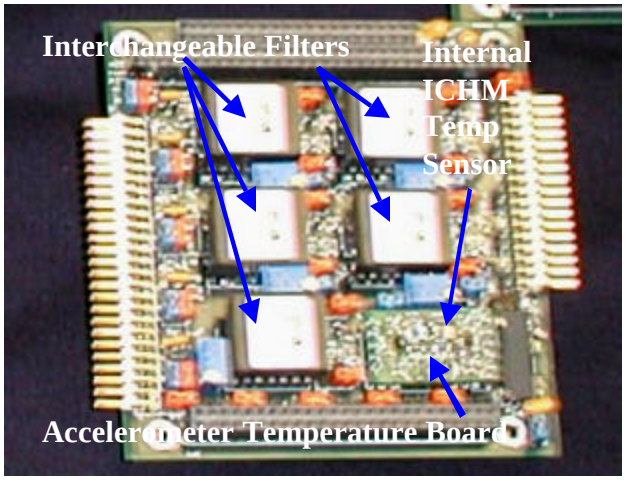

- 5 high speed analog anti-aliasing filters
- 5 channels sensor bias voltage – sensor health
  - active low pass filtering
- 4 channel temperature data
  - active low pass filtering
- 1 internal ICHM temperature
- Programmable gain digital I/O

Figure 48 Filter Board

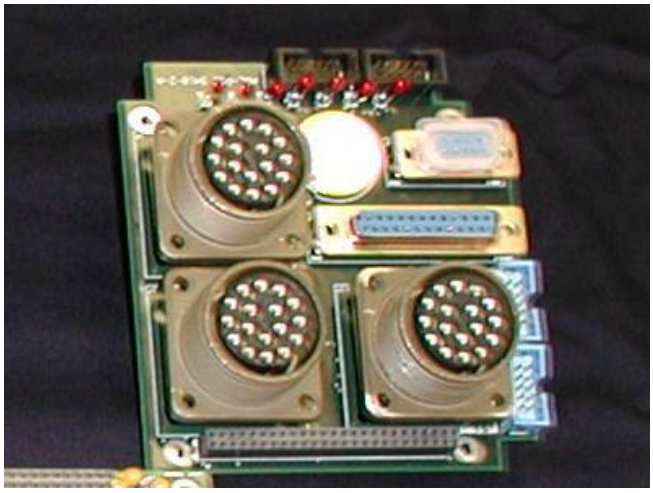

Reliable self contained interface with sensors

Mil-spec connectors

High, low and shield per channel

Keyboard, video, mouse and com ports

CPU battery

Figure 49 Connector Board

4.2.3.4 SHM

The SHM utilized a commercially available, rugged, smallPC with an EBX single board 233 MHz Pentium computer, WinNT OS and 2 PC104 expansion slots - Figure 50. The SHM was modified to accommodate 3 additional PC/104 cards including internal power supply (DC to DC) and two 2.4 GHz radios (one based on the Open Air Standard the other IEEE 802.11) via PCMCIA carriers. The demonstration system was configured with 256 MB of RAM, and a 20 GB laptop hard drive. Configured with SVGA, 4 serial ports, parallel port, and 10/100 Ethernet connection, the SHM computer supported connection of keyboard, mouse and monitor for system development but were not used during the demonstrations. The SHM was designed to automatically boot up/reboot and operate without operator intervention, including cases in which power is lost or the processor hangs up.

Figure 50 SmallPC - SHM

4.2.4 Software

4.2.4.1 Overview

The ICHM and SHM hardware provide the physical devices and means to acquire data from sensors mounted on the machinery, transmit data, health information, and alerts and alarms to the watchstation, and archive information related to the health of the machinery. The software running on the ICHM and SHM enable these functions. The ICHM software controls data acquisition, data processing and feature extraction, data fusion for individual ICHM sensors, performs classification and generates alert and alarm messages. The SHM software controls communication with the ICHMs, collects data,

alert and alarm messages from the ICHMs and provides that information to the watchstation, and archives data, processed parameters, and alert and alarm messages.

4.2.4.2 Communication Interface

The communication interface specifies the methods, architecture and protocol to communicate data between the RSVP Health Monitoring System (HMS) and the Access Points (APs). The interface between the RSVP access point and health monitoring subsystem is required to communicate (HMS) machinery data and health status information to both the access point and the RSVP user Watchstation. Watchstation data required from the HMS subsystem is routed through the access point. The access point routes Watchstation requests to the HMS subsystem. HMS publications are sent to the WS via the AP.

4.2.4.2.1 Overview

The protocol chosen to support the information exchange is the Network Data Delivery Service (NDDS) based upon a publish/subscribe paradigm. Using this protocol, subscription requests are sent to the HMS and an interface between the HMS data and NDDS is responsible for obtaining the necessary HMS data, bundling it into NDDS messages and publishing of those messages.

Communication within the HMS subsystem uses TCP/IP socket connections. The HMS data manager thread host a socket connection for to the NDDS interface server to communicate.

Various message formats are used to communicate over the TCP/IP link and the NDDS link. HMS to AP/WS message formats, as well as published data organized by parametric or series, is described in the section 4.2.4.2.2. Parameter data, organized by major monitored component, includes parametric messages for the SSGTG generator; reduction gear, auxiliary gearbox and engine, and correspond to the display of major components in the Watchstation GUI.

Each of the component measured parameters is requested from the HMS sub-system via the TCP/IP stream socket connection and the resulting message(s) are used to formulate an NDDS response. The response is sent via the NDDS PSStatic SendData member function.

Parametric messages are in the form of variable length messages. Each message contains one or more parameters, such as an associated timestamp, location and component identifier. Each of the parameters in the message are named and include the value and data type of the data.

In addition to providing HMS NNDS server services to the rest of the network, the interface allows requests to be made which support changing HMS parameters from the Watchstation or an AP. This functionality facilitates user inputs to change programmable

system parameters. The setting of parameters is supported by a parametric message structure, which originates at the Watchstation GUI and is sent to the appropriate node.

4.2.4.2.2 HMS to AP/WS Message Data Formats

Since health monitoring data will vary widely between monitored machinery, it is desirable to establish data formats that are flexible with regard to the type and number of parameters that may be required. Two options were considered for use in the RSVP HMS system

One solution is to develop distinct message formats for each piece of equipment monitored. In this approach, the data types of the parameter sets are explicitly defined. This approach is efficient in terms of message size requirements and would have suited the limited scope of the RSVP demonstration. However, to extend this approach beyond the demonstration program, modifications to the parsing software would have to be made for each newly developed format.

The other solution considered (and selected for RSVP), is to provide a message format that is parsed easily without an *a-priori* knowledge of the message format. Using this approach, the number, type and name of the message parameters are embedded in the message. The parsing of these messages still requires software that is responsible for understanding each named parameter within a message; however, this could be accomplished at the Watchstation by configuring datamap entries for the user interface.

The datamap dispatches named parameters based upon a runtime configuration. By modifying the runtime configuration, data can be mapped to user interface indicators without modifying the underlying software. This is not only advantageous for system extensibility but facilitated the User Interface development process. New indicators could be added and associated with data elements without changing the underlying interface code.

To accommodate a variable length and type message, the format shown in Table 16 and Table 17 was selected. Time series and frequency spectra message formats were treated separately, as shown in Table 18, to allow more efficient network utilization for large data records.

Health vectors were treated as a special case of parametric data. Each parameter in the parameter message format, as shown in Table 16, is used to represent a corresponding health vector field. Table 19 illustrates the parametric message format used to represent a health vector.

Table 16 Parametric Data Format

Data Type	Description
ULONG	Time/Date in ANSII standard format: seconds since January 1, 1970
ULONG	Time in microseconds for higher precision time stamps
CHAR	Byte ordering (big vs. little endian)
UINT	Location ID identifies the compartment/location of the machine
ENUM	Machinery ID Identifies the machine being monitored
ULONG	Length in Bytes of data to follow
PARAM	Parameter 1 (see Table 2)
PARAM :	Parameter 2 (see Table 2) :
PARAM	Parameter n (see Table 2)

Table 17 Parameter Structure

PARAM Structure TYPE	Description
UINT	Parameter ID – Identifies the parameter (e.g., compressor inlet temperature)
UCHAR	Type – Identifies the parameter type as integer, long, short string, etc.
UCHAR	Bytes corresponding to the data type above. Strings are NULL terminated.

Table 18 Time Frequency Message Formats

Data Type	Description
ULONG	Time/Date in ANSII standard format: seconds since January 1, 1970
ULONG	Time in microseconds for higher precision time stamps
UINT	Location ID identifies the compartment/location of the machine
ENUM	Machinery ID Identifies the machine being monitored
ULONG	Length number of data bytes in this message
UCHAR	*Data Type* (float, double, integer, long, etc.)
UINT	Number of Channels
FLOAT	Sample Rate of the Data
FLOAT[ ]	Calibration array – Multiplier to scale the data (0 – none; one multiplier per channel)
FLOAT[ ]	Offset array – DC offset for data (one offset per channel)
UINT	Domain – Time (1) or Frequency (2)
Given in Type Field	Channel 1, Sample 1
Given in Type Field	Channel 2, Sample 1
Given in Type Field	Channel 3, Sample 1
:	:
Given in Type Field	Channel N, Sample 1
Given in Type Field	Channel 1, Sample 2
Given in Type Field	Channel 2, Sample 2
Given in Type Field	Channel 3, Sample 2
:	:
Given in Type Field	Channel N, Sample 2
:	:
Given in Type Field	Channel 1, Sample N
Given in Type Field	Channel 2, Sample N
Given in Type Field	Channel 3, Sample N
:	:
Given in Type Field	Channel N, Sample N

Table 19 Health Vector In Parameter Message Format

Data Type	Description
ULONG	Time/Date in ANSII standard format seconds since Jan 1, 1970
ULONG	Time in microseconds for higher precision time stamps
CHAR	Byte ordering (big vs. little endian)
UINT	Location ID identifies the compartment/location of the machine
ENUM	Machinery ID Identifies the machine being monitored
ULONG	Length in Bytes of data to follow
UINT	Parameter ID1 – Fault Type ID
UCHAR	Type – Integer
INT	Fault ID #
UINT	Parameter ID2 – Severity
UCHAR	Type – Integer
INT	Severity level (0-1)
UINT	Parameter ID3 – Confidence
UCHAR	Type – float
FLOAT	Confidence level (0-1)
UINT	Parameter ID4 – Threshold
UCHAR	Type – float
FLOAT	Threshold level (0-1)
UINT	Parameter ID5 – Time to Threshold (seconds)
UCHAR	Type – float
FLOAT	Time to Threshold Value

4.2.4.2.3 Interface Design Specification

The structure of the AP to HMS protocol is:

1. An NDDS request is made to a HMS NDDS server process to begin a publication or set a parameter.

2. Upon receipt of the request, the HMS NDDS sever process requests all HMS data messages necessary to formulate the output NDDS message via a TCP/IP stream socket connection to the HMS data manager thread.

3. Each HMS request responds with a status indicating that the request is valid/invalid and a maximum wait time for the data.

4. The HMS NDDS Server Process responds to the AP/Watchstation request with a status indicating the validity of the request.

5. In the event that an error is found by the HMS NDDS server process, an error is sent to the requesting NDDS node to indicate failure.

6. In the event that no error is indicated, the HMS NDDS server waits until the stream socket connection receives requested data. The timeout is dependent on the maximum wait time specified in 3. In the case of a parameter setting request, the process is complete at this point.

7. Each time an HMS message corresponding to a requested data type is read by the NDDS interface thread at the HMS, it is used to formulate the NDDS response. When more than one HMS message is required, the current output NDDS structure is updated for each input HMS message until an entire set of inputs is received. When the entire set of inputs has been received, an internal status resets the output message state to allow a new set of updates. For parameter settings, a received setting of the actual value is used to send the message.

8. The resulting message is published.

Items 7 and 8 are repeated until a request to stop is sent to the HMS data manager thread or a time out occurs. When the HMS NDDS server receives a request to stop publishing, requests are sent to the HMS data manager to stop sending the requested data set(s). Figure 51 illustrates the HMS interface data flow.

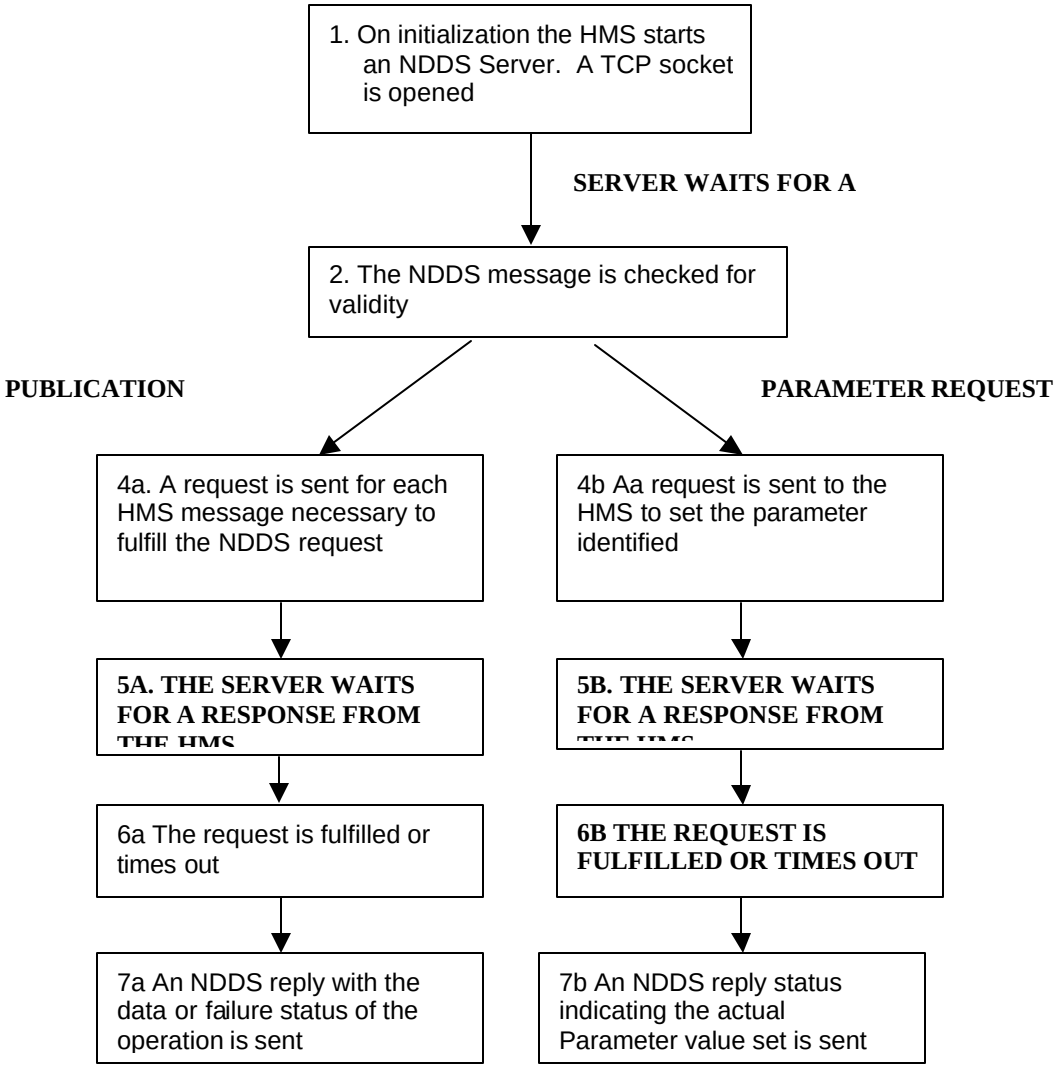

Figure 51 Interface Flow Diagram

The TCP/IP portion of the protocol will operate by opening a connection to the HMS sub-system using a windows stream socket application layer interface. The HMS data management services will be configured to accept a stream connection at an address dedicated to the NDDS/HMS interface. When a socket connection is established the NDDS layer will forward the request for data to the HMS and wait for a response indicating whether the operation succeeded. The NDDS layer will then wait for incoming messages from the HMS. The HMS will continue to send updates until a request to stop sending the data is received. Each time a structure corresponding to the requested data is received, the NDDS layer will publish it back to the Watchstation. To accommodate a variable length and type message, the format shown in Table 20 is used. The general format consists of a master header followed by a series of messages. The type and number of messages are specified in the header. All messages, regardless of type have the

same header format, specified in Table 21. Table 22 contains enumerations of various parameters within the master header:

Semaphore: Error checking word to validate the message header
Message type: Type of message
Time/Data: UTC time stamp of message
Microtime: Time in microseconds for additional time precision.
Location ID: Compartment Location
Machine ID: Machine
Component ID: Machine Component
RequestID: Unique number of request used for parsing of the message by requestor
Length: length in Bytes of data following master header
#Messages: Number of messages of <message type> to follow

Table 20 Generic HMS Message Structure

Data Type	Description
HEADER	MASTER HEADER (TABLE 2-1)
MSG	MESSAGE 1 (OF TYPE SPECIFIED IN HEADER)
MSG :	MESSAGE 2 (OF TYPE SPECIFIED IN HEADER) :
MSG	MESSAGE N (OF TYPE SPECIFIED IN HEADER)

Table 21 TCP/IP HMS Master Header

Data Type	Description
ULONG	**Semaphore word 0xAAAA5555**
ULONG	**Message type (Interface + Message/Request/Response Type) (Enumerations in Table 2-2)**
ULONG	TIME/DATE IN ANSII STANDARD FORMAT: SECONDS SINCE JANUARY 1, 1970
ULONG	TIME IN MICROSECONDS FOR HIGHER PRECISION TIME STAMPS
ULONG	LOCATION ID IDENTIFIES THE COMPARTMENT/LOCATION OF THE MACHINE (ENUMERATIONS IN TABLE 2-2)
ULONG	MACHINERY ID IDENTIFIES THE MACHINE BEING MONITORED (ENUMERATIONS IN TABLE 2-2)
ULONG	COMPONENT ID IDENTIFIES THE COMPONENT BEING MONITORED (ENUMERATIONS IN TABLE 2-2)
ULONG	REQUEST ID IDENTIFIES THE NDDS DATA REQUEST MESSAGE ID
ULONG	LENGTH IN BYTES OF DATA TO FOLLOW AFTER THIS HEADER
ULONG	# OF THIS MESSAGE TYPE TO FOLLOW

Table 22 Header Enumeration

ENUMeration	MNUMONIC	VALUE (HEX)	DESCRIPTION
MESSAGE TYPE	**PARAMETER**	**1**	PARAMETRIC MESSAGE STRUCTURE DEFINED IN TABLE 3-1
	RAWDATA	**2**	RAW DATA STRUCTURE DEFINED IN TABLE 3-6
	ALERT/HEALTH	**3**	ALERT/HEALTH STRUCTURE DEFINED IN TABLE 3-1
	STRINGMESSAGE	**4**	GENERIC TEXT MESSAGE TABLE 3-1
	ID	**5**	UNIT LEVEL ID MESSAGE TABLE 3-2
	PARAM_DATA_STRUCT	**6**	PSU ICHM TO SHM DATA STRUCTURE TABLE 5-1
	FAULT_DATA_STRUCT	**7**	PSU ICHM TO SHM DATA STRUCTURE TABLE 5-2
	INFO_MESSAGE	**8**	ICHM INFO MESSAGE
	TREND_DATA_STRUCT	**9**	TREND DATA STRUCTURE TABLE 3-8
	PUBLICATION_START	**20**	START DATA PUBLICATION TABLE 3-3
	PUBLICATION_STOP	**30**	STOP DATA PUBLICATION TABLE 3-4
	PUBLICATION_RESPONSE	**40**	RESPONSE TO PUB START/STOP TABLE 3-5
	TREND_PUBLICATION_START	**50**	TREND DATA PUB START/STOP TABLE 3-7
LOCATION ID	MACHINERY_ROOM	10	MACHINERY ROOM
	ENGINE_ROOM	20	ENGINE ROOM
MACHINERY ID	**SSGTG1**	1	**Ship Service Gas Turbine Generator #1**
	SSGTG2	2	**Ship Service Gas Turbine Generator #2**
	SSGTG3	3	**Ship Service Gas Turbine Generator #3**
COMPONENT ID	**GENERATOR ELECTRICAL**	1	ELECTRICAL GENERATOR ELECTRICAL COMPONENTS
	GENERATOR MECHANICAL	2	ELECTRICAL GENERATOR BEARINGS
	REDUCTION GEARBOX	3	REDUCTION GEAR BOX
	ENGINE	4	ENGINE

4.2.4.2.4 Interface Timing and Control

Certain timeouts will be used in the execution of the protocol to allow error handling when an expected response is not received in a timely manner. Figure 52 details the worst case interface timing required for major events: