DEPARTMENT OF THE NAVY

NAVAL SEA SYSTEMS COMMAND
1333 ISAAC HULL AVE SE
WASHINGTON NAVY YARD DC 20376-0001

IN REPLY TO

8020
Ser 06/006
29 Jan 03

From: Commander, Naval Sea Systems Command
To: Director, Naval Surface Warfare Center Indian Head Division Det Earle, 201 Highway 34 South, Colts Neck, NJ 07722-5023

Subj: ABSTRACT OF SIGNIFICANT CHANGES TO NAVSEA OP 3565 VOLUME 1, "ELECTROMAGNETIC RADIATION HAZARDS (HAZARDS TO PERSONNEL, FUEL AND OTHER FLAMMABLE MATERIAL)" REVISION SIX

Ref: (a) NAVSEA OP 3565 Volume 1, Revision Five with Change 2, of 15 Jul 1982

1. This letter issues Revision Six of subject publication. It is a complete revision. All eight chapters and associated appendices have been updated to current standards for all sources of electromagnetic radiation. Revision Six supersedes reference (a), which should be destroyed.

2. The following is a summary of the significant changes included in Revision Six:

a. Redefines and updates Permissible Exposure Limits (PEL) for personnel, as well as induced and contact current exposure limit guidelines.

b. Updates RADHAZ warning sign formats, application guidelines and ordering information.

c. Incorporates formulas for calculating Hazards of Electromagnetic Radiation to Personnel (HERP) safe standoff distances from transmitting antennas.

d. Deletes references to outdated/obsolete transmitting equipment. Adds nearly 400 new emitters, with associated HERP standoff distances, for the following categories of equipment:

(1) Shipboard communication and satellite systems
(2) Shore based communication and satellite systems
(3) Shipboard radar and navigation systems
(4) Shore based radar and navigation systems

Subj: ABSTRACT OF SIGNIFICANT CHANGES TO NAVSEA OP 3565 VOLUME 1, "ELECTROMAGNETIC RADIATION HAZARDS (HAZARDS TO PERSONNEL, FUEL AND OTHER FLAMMABLE MATERIAL)" REVISION SIX

e. Deletes HERP data associated with 25 obsolete aircraft radar systems, and adds 22 new graphics, depicting HERP safe standoff distances associated with radar systems installed in current Navy/Marine Corps aircraft.

f. Redefines the biological hazards associated with laser devices, updates laser classification and labeling requirements, and updates points of contact for laser safety issues and technical assistance.

g. Redefines shipboard and shore based fuel handling precautions and transmitter restrictions in proximity to fuel handling operations. Provides a formula to calculate the minimum safe separation distances required between transmitting antennas and fuel handling areas.

h. Revises calculations and measurements of electromagnetic fields.

3. The NAVSEA point of contact is Mr. Ron Bradley, SEA 623, at commercial (202) 781-3537, DSN 326-3537 or via electronic mail at BradleyHR@navsea.navy.mil.

ALAN B. HICKS
By direction

Copy to:
Naval Ordnance Safety and Security Activity (C. Wakefield/N716)

NAVSEA OP 3565/NAVAIR 16-1-529 VOLUME 1

SIXTH REVISION

TECHNICAL MANUAL

ELECTROMAGNETIC RADIATION HAZARDS (U)(HAZARDS TO PERSONNEL, FUEL AND OTHER FLAMMABLE MATERIAL) (U)

DISTRIBUTION STATEMENT C

Distribution authorized to U.S. Government agencies and their contractors; administrative/operational use; 1 February 2003. Other requests for this document must be referred to the Naval Ordnance Safety and Security Activity (NOSSA) (N716).

WARNING

This document contains technical data whose export is restricted by the Arms Export Control Act (Title 22, USC, Sec 2751 et. seq.) or Executive Order 12470. Violations of these export laws are subject to severe criminal penalties.

DESTRUCTION NOTICE

Destroy by any method that will prevent disclosure of contents or reconstruction of the document.

THIS PUBLICATION SUPERSEDES NAVSEA OP 3565/NAVAIR 16-1-529 VOLUME 1 FIFTH REVISION DATED 15 JULY 1982

PUBLISHED BY DIRECTION OF COMMANDER, NAVAL SEA SYSTEMS COMMAND

This page left intentionally blank

NAVSEA OP 3565/NAVAIR 16-1-529 VOLUME 1

SIXTH REVISION

TECHNICAL MANUAL

ELECTROMAGNETIC RADIATION HAZARDS (U)(HAZARDS TO PERSONNEL, FUEL AND OTHER FLAMMABLE MATERIAL) (U)

DISTRIBUTION STATEMENT C

Distribution authorized to U.S. Government agencies and their contractors; administrative/operational use; 1 February 2003. Other requests for this document must be referred to the Naval Ordnance Safety and Security Activity (NOSSA) (N716).

WARNING

This document contains technical data whose export is restricted by the Arms Export Control Act (Title 22, USC, Sec 2751 et. seq.) or Executive Order 12470. Violations of these export laws are subject to severe criminal penalties.

DESTRUCTION NOTICE

Destroy by any method that will prevent disclosure of contents or reconstruction of the document.

THIS PUBLICATION SUPERSEDES NAVSEA OP 3565/NAVAIR 16-1-529 VOLUME 1 FIFTH REVISION DATED 15 JULY 1982

PUBLISHED BY DIRECTION OF COMMANDER, NAVAL SEA SYSTEMS COMMAND

1 FEBRUARY 2003

Reproduction for nonmilitary use of the information or illustrations contained in this publication is not permitted. This does not preclude reproduction and use of any part of this manual by contracted agencies responsible for the training and instruction of personnel who handle and transport military ammunition, explosives, and related hazardous materials. The policy for military use reproduction is established for the Army in AR 380-5, for the Navy and Marine Corps in OPNAVINST 5510.1 series, and for the Air Force in Air Force Regulations 205-1.

LIST OF EFFECTIVE PAGES

The total number of pages in this manual is 150. They are all original Revision Six pages. The date of issue for all pages in this manual is 1 February 2003.

NAVSEA TECHNICAL MANUAL CERTIFICATION SHEET

CERTIFICATION APPLIES TO: NEW MANUAL ___ REVISION 6 CHANGE ___

APPLICABLE TMINS/PUB NO.: NAVSEA OP 3565/NAVAIR 16-1-529 VOLUME 1

PUBLICATION DATE (MO, DA, YR): 1 FEBRUARY 2003

READING GRADE LEVEL (RGL): ___

TITLE: ELECTROMAGNETIC RADIATION HAZARDS (U) (HAZARDS TO PERSONNEL, FUEL AND OTHER FLAMMABLE MATERIAL) (U)

TMCR/TMSR/SPECIFICATION NO.: ___

CHANGES AND REVISIONS:

PURPOSE: ___

EQUIPMENT ALTERATION NUMBERS INCORPORATED: ___

TMDER/ACN NUMBERS INCORPORATED: ___

CONTINUE ON REVERSE SIDE OR ADD PAGES AS NEEDED

CERTIFICATION STATEMENT

THIS IS TO CERTIFY THAT RESPONSIBLE NAVSEA ACTIVITIES HAVE REVIEWED THE ABOVE IDENTIFIED DOCUMENT FOR ACQUISITION COMPLIANCE, TECHNICAL COVERAGE, AND PRINTING QUALITY. THIS FORM IS FOR INTERNAL NAVSEA MANAGEMENT USE ONLY, AND DOES NOT IMPLY CONTRACTUAL APPROVAL OR ACCEPTANCE OF THE TECHNICAL MANUAL BY THE GOVERNMENT, NOR RELIEVE THE CONTRACTOR OF ANY RESPONSIBILITY FOR DELIVERING THE TECHNICAL MANUAL IN ACCORDANCE WITH THE CONTRACT REQUIREMENT.

AUTHORITY	NAME	SIGNATURE	ORGANIZATION	CODE	DATE
ACQUISITION	K. H. ZIMMS	K. H. Z	PHST CENTER NAVAL SURFACE WARFARE CENTER INDIAN HEAD DIVISION DET EARLE COLTS NECK, NJ	71	2/5/03
TECHNICAL	A. V. STANTON	A.V.Stanton	PHST CENTER NAVAL SURFACE WARFARE CENTER INDIAN HEAD DIVISION DET EARLE COLTS NECK, NJ	715	2/5/03
PRINTING RELEASE	J. DIMAGGIO	J. DiMaggio	PHST CENTER NAVAL SURFACE WARFARE CENTER INDIAN HEAD DIVISION DET EARLE COLTS NECK, NJ	715JD	2/5/03

This page left intentionally blank

FOREWORD

1. The purpose of this volume is to prescribe operating procedures and precautions to prevent injury to personnel and ignition of volatile vapors from exposure to environmental electromagnetic radiation (EMR). The sources of this EMR include communications transmitters, radars, electronic countermeasures transmitters, and lasers.

2. This manual provides data and information concerning nonionizing radio frequency (RF), hazards to personnel, fuel, and other flammable material, as well as laser hazards to personnel.

3. This manual cancels and supersedes NAVSEA OP 3565/NAVAIR 16-1-529/ NAVELEX 0967-LP-624-6010 Fifth Revision of 15 July 1982, which should be destroyed. The Chief of Naval Operations, and Commanders of the Naval Air Systems Command and Space and Naval Warfare Systems Command, concur with this provision.

4. This manual provides technical guidance to assist commanding officers in carrying out their responsibilities for EMR safety. The procedures and precautions prescribed herein apply in every instance within the Naval establishment where a person or a flammable vapor mixture is exposed to RF fields of potentially hazardous intensity. Operational Commanders may waive compliance with any provision when essential under emergency conditions. When noncompliance with restrictions contained herein is essential, emergency procedures are suggested and background information is provided in order to explain and minimize the risks involved.

5. The concept of word usage and intended meaning which has been adhered to in preparing this manual is as follows:

"Shall" has been used only when a specified action or procedure is mandatory.

"Should" has been used only when a specified action or procedure is recommended.

"May" and "need not" have been used only when a specified action or procedure is optional.

"Will" has been used only to indicate futurity. No requirement for compliance is implied.

6. Changes and revisions to this publication will be promulgated by Naval Sea Systems Command (NAVSEA) in a timely manner following coordination with the other cognizant commanders. Interim changes will be made by letter or message as advance change notices, which will be forwarded to the commanders directly concerned. Formal changes will be forwarded to all addresses on the controlled distribution list of this manual and, subsequently, will be included in formal revisions. Comments or suggestions relative to material to be included in such changes should be forwarded as specified in chapter 1.

7. Assistance in evaluating specific electromagnetic or other radiation hazards or interpreting provisions of this manual can be obtained by contacting NAVSEA, Code 53H3.

This page left intentionally blank

TABLE OF CONTENTS

Chapter/Paragraph **Page**

List of Figures ..... **iv**

List of Tables ..... **v**

Safety Summary ..... **vi**

CHAPTER 1 INTRODUCTION **1-1**

1-1. Purpose and Scope of Manual 1-1
1-2. Background 1-1
1-2.1 RF Hazards to Personnel 1-1
1-2.2 Laser Hazards to Personnel 1-2
1-2.3 Ionizing Radiation 1-2
1-2.4 RF Hazards to Fuel 1-2
1-2.5 RF Hazards to Ordnance 1-2
1-3. Responsibilities 1-2
1-3.1 Naval Sea Systems Command 1-2
1-3.2 Space and Naval Warfare Systems Command (SPAWAR) 1-2
1-3.3 Bureau of Medicine and Surgery (BUMED) 1-2
1-3.4 Commanding Officer 1-2
1-3.5 Ship and Shore Supervisory Personnel 1-3
1-3.6 Ship and Shore Operating Personnel 1-4
1-4. Personnel Training 1-4
1-5. Precautions to Ensure the Safety of Personnel 1-5
1-6. Radio Frequency and Laser Overexposure Reporting Requirements 1-6
1-7. Definitions and Abbreviations 1-6
1-8. Reference Documents 1-6
1-9. Biological Effects of Electromagnetic Radiation (EMR) and Safe Exposure Limits 1-6
1-10. Calculations and Measurements of Electromagnetic Fields 1-6
1-11. Reporting Omissions/Errors in Manual 1-7

CHAPTER 2 HAZARDS OF ELECTROMAGNETIC RADIATION TO PERSONNEL **2-1**

2-1. Introduction 2-1
2-1.1 General 2-1
2-1.2 Background 2-1
2-2. EMR Hazards to Personnel 2-1
2-2.1 Permissible Exposure Limits (PELs). 2-1
2-2.2 Warning Signs, Devices, and Controls. 2-5
2-2.3 Calculated HERP Standoff Distances. 2-7
2-2.4 Radio Frequency Equipment Hazards. 2-7

TABLE OF CONTENTS (CONTINUED)

Chapter/Paragraph **Page**

2-2.5 Aircraft Radar Hazards. 2-8
2-2.6 HERP Standoff Distance Tables..... 2-9

CHAPTER 3 RF BURNS 3-1

3-1. Scope 3-1
3-2. RF Burns from Cargo-Handling Equipment 3-1
3-2.1 General. 3-1
3-2.2 RF Burn Effects. 3-1
3-2.3 Electrical Characteristics of Metallic Objects. 3-1
3-3. RF Burn Hazard Reduction Techniques 3-3
3-3.1 Introduction. 3-3
3-3.2 Limiting Body Contact Current. 3-3
3-3.3 Hook Insulators. 3-3
3-3.4 Nonmetallic Materials. 3-3
3-3.5 Antenna Relocation. 3-3
3-3.6 Operational Procedures. 3-3
3-3.7 RF Radiation Hazard Warning Signs. 3-4

CHAPTER 4 BIOLOGICAL RADIATION HAZARD FROM LASER DEVICES 4-1

4-1. Introduction 4-1
4-2. General Precautions Applicable to All Laser Installations 4-1
4-3. Laser Classification and Labeling 4-4
4-3.2 Military Exempt Lasers. 4-4
4-3.3 Laser Range and Building Warning Signs. 4-5
4-4. Training 4-5
4-5. Medical Surveillance 4-5
4-6. Command Laser Safety Program 4-5
4-7. Calculation of Laser Safe Distances and Permissible Laser Exposure Levels 4-6
4-8. Laser Technical Assistance 4-6

CHAPTER 5 IONIZING RADIATION 5-1

5-1. Introduction 5-1
5-2. Units of Measurement 5-1
5-3. Methods of Detecting Ionizing Radiation 5-1
5-4. Radiac Equipment 5-1
5-5. Hazard Level 5-2
5-6. Precautions 5-2

TABLE OF CONTENTS (CONTINUED)

Chapter/Paragraph **Page**

CHAPTER 6 HAZARDS OF ELECTROMAGNETIC RADIATION TO FUEL..... 6-1

6-1. Introduction and Background 6-1
6-2. Physical Nature of Combustion 6-1
6-3. Handling Precautions for Fuels in an RF environment 6-4
6-3.1 Introduction. 6-4
6-3.2 Fueling Precautions. 6-4
6-3.3 Transmitter Restrictions. 6-5

APPENDIX A DEFINITIONS AND ABBREVIATIONS..... A-1

APPENDIX B REFERENCE DOCUMENTS..... B-1

APPENDIX C BIOLOGICAL EFFECTS OF ELECTROMAGNETIC RADIATION AND SAFE EXPOSURE LIMITS..... C-1

APPENDIX D CALCULATIONS AND MEASUREMENTS OF ELECTROMAGNETIC FIELDS..... D-1

LIST OF FIGURES

FIGURE	TITLE	PAGE
2-1	RADHAZ Warning Sign Formats	2-4
2-2	Aircraft Radiation Patterns	2-25
	A/V-8B HARRIER	2-25
	C-2 GRAYHOUND	2-26
	C-9B SKYTRAIN	2-27
	C-20 GULFSTREAM IV	2-28
	C-37 GULFSTREAM V	2-29
	C-40A CLIPPER (BOEING 737-700)	2-30
	C-130 HERCULES	2-31
	KC-130 HERCULES	2-32
	E-2C HAWKEYE	2-33
	E-6A MERCURY (TACAMO)	2-34
	EA-6B PROWLER	2-35
	F-14 (ALL MODELS)	2-36
	F/A-18 (ALL MODELS)	2-37
	P-3C ORION	2-38
	P-3C ORION	2-39
	P-3C ORION	2-40
	S-3B VIKING	2-41
	SH-60B SEAHAWK	2-42
	T-39N SABERLINER	2-43
	UC-12B HURON	2-44
	UC-35 CITATION	2-45
	V-22 OSPREY	2-46
3-1	Electrical Equivalent of Cargo-Handling Equipment	3-2
4-1	Laser Wavelength Chart	4-2
4-2	Military Laser Exemption Label	4-5
6-1	Effect of Temperature in Generating Hydrocarbon Fuel Flammable Vapors	6-2
6-2	Temperature-Flammability Ranges for Fuels	6-3
6-3	HERF Safe Separation Distance Calculation for MOGAS/AVGAS (Radar and Communication Systems 225 MHz and Above)	6-6
6-4	HERF Safe Separation Distance Calculation for MOGAS/AVGAS (Communication Systems Below 225 MHz)	6-7
C-1	Graphic Representation of Permissible Exposure Limits in Terms of Fields and Power Density for a Controlled Environment	C-6
C-2	Graphic Representation of Permissible Exposure Limits in Terms of Fields and Power Densityfor an Uncontrolled Environment	C-7
D-1	Calculation of Antenna Illumination Constant	D-6
D-2	Fresnel Region Gain Correction for Uniform Illumination (Rectangular Aperture)	D-8
D-3	Fresnel Region Gain Correction for Cosine Illumination (Rectangular Aperture)	D-9

LIST OF FIGURES (CONTINUED)

FIGURE	TITLE	PAGE
D-4	Fresnel Region Gain Correction for Cosine Square Illumination (Rectangular Aperture)	D-10
D-5	Fresnel Region Gain Correction for Cosine Cubed Illumination (Rectangular Aperture)	D-11
D-6	Fresnel Region Gain Correction for Cosine Fourth Illumination (Rectangular Aperture)	D-12
D-7	Normalized On-Axis Power Density Curves Circular Aperture (1-r2)ρ	D-13
D-8	Sample On-Axis Power Density Computation for a Rectangular Aperture Antenna (Sheet 1)	D-16
D-8	Sample On-Axis Power Density Computation for a Rectangular Aperture Antenna (Sheet 2)	D-17
D-9	Sample On-Axis Power Density Computation for a Circular Aperture Antenna (Sheet 1)	D-18
D-9	Sample On-Axis Power Density Computation for a Circular Aperture Antenna (Sheet 2)	D-19
D-10	Functions of a Right Triangle	D-21
D-11	Sample Use of Trigonometric Functions for Solving Problems	D-22
D-12	Power Gain Ratio Versus Decibel Gain	D-26
D-13	Power Gain Ratio Versus dBm	D-29
D-14	Example of a Power Density Measurement	D-34

LIST OF TABLES

TABLES	TITLE	PAGE
2-1	Shipboard Communication and Satellite Systems	2-10
2-2	Shore-Based Communication and Satellite Systems	2-14
2-3	Shipboard Radar and Navigation Systems	2-18
2-4	Shore-Based Radar and Navigation Systems	2-21
2-5	Aircraft Radar Systems	2-23
2-6	Aircraft Radiation Patterns	2-24
C-1	PELs for Controlled Environments (Electromagnetic Fields†)	C-2
C-2	PELs for Controlled Environments (Induced and Contact Current)	C-2
C-3	PELs for Uncontrolled Environments (Electromagnetic Fields†)	C-4
C-4	PELs for Uncontrolled Environments (Induced and Contact Current)	C-4
D-1	Rectangular Apertures	D-6
D-2	Circular Apertures with (1-r2)ρ Illumination	D-6
D-3	Circular Aperture Distribution	D-14
D-4	Rectangular Aperture Distribution	D-14
D-5	Decibel Table: Voltage, Current, and Power Ratios	D-25
D-6	dBm Conversion Table	D-30

SAFETY SUMMARY

Volume 1 of this publication is a safety manual which discusses the hazards of electromagnetic radiation (RF and laser) to personnel and fuel and approved methods or procedures for minimizing accidents. Separate warnings or cautions are not contained herein because the entire content is a warning to the user. However, notes are supplied in the text to emphasize unusual or special procedures or conditions. Failure to observe operating procedures and precautions specified in this manual may result in injury to personnel from RF or laser radiation or the ignition of fuel.

This page left intentionally blank

CHAPTER 1

INTRODUCTION

1-1. PURPOSE AND SCOPE OF MANUAL

1-1.1 This manual consists of two unclassified volumes to provide the data necessary for the protection of personnel, fuels, and ordnance from radio-frequency (RF) energy (including laser devices). Volume 1 discusses the Hazards of Electromagnetic Radiation to Personnel (HERP) and the Hazards of Electromagnetic Radiation to Fuels (HERF) and other flammable materials. Volume 2 discusses the Hazards of Electromagnetic Radiation to Ordnance (HERO).

1-1.2 Both volume 1 and volume 2 address the standoff distances from shipboard and shore-based transmitters required to satisfy HERP and HERO (respectively) safety criteria. In addition, the radiation patterns and safe standoff distances from Navy/Marine Corps aircraft radars are illustrated

1-1.3 This manual shall be used by the following types of naval activities:

Marine Corps Air Stations
Marine Corps Bases
Naval Air Facilities
Naval Air Stations
Naval Air Warfare Centers
Naval Computer and Telecommunications Facilities
Naval Laboratories
Naval Magazines
Naval Missile Ranges
Naval Ordnance Facilities
Naval Ships
Naval Shipyards
Naval Stations
Naval Surface Warfare Centers
Naval Systems Commands
Naval Weapons Stations
Submarine Support Facilities

1-2. BACKGROUND

1-2.1 RF HAZARDS TO PERSONNEL. Radiation from antennas fed by high-powered RF transmitters has the potential for injuring personnel present in the vicinity of the radiating antennas. Transmitters aboard ships, on aircraft, and at shore stations are potential sources of harmful radiation. At some frequencies, exposure to excessive levels of RF radiation will not produce a noticeable sensation of pain or discomfort to give warning that injury may be occurring. Radiated energy can also result in high levels of induced and contact current

through the body when in close proximity to high-power RF transmitting antennas below 100 MHz. RF hazards to personnel, permissible exposure limits, and an explanation of induced and contact currents are contained in chapter 2. RF burns are discussed in chapter 3.

1-2.2 LASER HAZARDS TO PERSONNEL. Laser radiation of high intensity, if absorbed by the body or eyes, may result in permanent damage. The details for laser operation, safety precautions, and safe exposure levels are contained in chapter 4.

1-2.3 IONIZING RADIATION. Ionizing radiation sources, hazard levels, and safety precautions are discussed in chapter 5.

1-2.4 RF HAZARDS TO FUEL. Study and research are continuing to (1) provide safe handling distances for fuel and (2) eliminate conditions conducive to arcing during fuel handling. Procedures to reduce the possibility of fuels being ignited by RF radiation-induced arcing are provided in chapter 6.

1-2.5 RF HAZARDS TO ORDNANCE. Electroexplosive devices, electrically initiated devices, and ordnance electrical systems may be affected when exposed to RF energy. The Naval Sea Systems Command (NAVSEA) Program Executive Office sponsors testing programs to determine weapon susceptibility to RF energy. Tests are conducted in the maximum RF environments to which ordnance items may be exposed during a typical stockpile-to-launch scenario. An affected system or item might have sufficient current induced by the RF field to result in premature firing, explosion, or dudding. A listing of all Navy and Marine Corps ordnance with HERO concerns is contained in Volume 2.

1-3. RESPONSIBILITIES

1-3.1 NAVAL SEA SYSTEMS COMMAND. NAVSEA, in accordance with Chief of Naval Operations directives, exercises technical direction over fleet personnel safety and is responsible for shipboard HERP- and HERF-related data and issues. As part of NAVSEA, Naval Ordnance Safety and Security Activity, N716, is responsible for all HERO-related data and safety of ammunition, explosives, and other hazardous materials in the fleet and shore establishments.

1-3.2 SPACE AND NAVAL WARFARE SYSTEMS COMMAND (SPAWAR). SPAWAR is responsible for shore facility HERP- and HERF-related data and issues.

1-3.3 BUREAU OF MEDICINE AND SURGERY (BUMED). BUMED is responsible for adopting scientifically established personnel exposure levels for electromagnetic and laser radiation, reviewing personnel overexposures, and providing appropriate medical recommendations.

1-3.4 COMMANDING OFFICER. In addition to the duties and responsibilities inherent in the position of commanding officer as set forth in Navy regulations or as promulgated by higher authority, the commanding officer of a ship or naval shore station is solely responsible for the safety of his/her command. He/she must take the same active, aggressive leadership in safety

that he/she takes in other phases of command responsibility. It is the commanding officer's responsibility to require personnel of other agencies, including contractors, while on board ship or at a facility under his/her command, to conduct their activities in accordance with established safety rules. The commanding officer shall enforce the mandatory requirements of this manual and shall initiate those directives and inspections necessary to evaluate compliance with the rules and regulations prescribed herein. The absence of a safety requirement in this manual, or in the documents referenced herein, does not necessarily indicate that safeguards are not required. Commanding officers have the authority to impose and enforce more stringent safety rules than those imposed by higher authority. Where no existing safety rule or regulation applies, or where a deviation from an established mandatory safety regulation is desired, the commanding officer shall submit to Commander, NAVSEA, Code 53H, full particulars and detailed plans for approval. In the interim, the commanding officer shall take the necessary action to control the hazard. Shipboard commanders may waive compliance with any provision of this manual when essential under emergency conditions.

1-3.5 SHIP AND SHORE SUPERVISORY PERSONNEL. Supervisors shall be thoroughly familiar with the provisions of this publication. Supervisors have no authority to waive or alter NAVSEA and station safety regulations, nor shall they permit the violation of such safety regulations by others. They shall act positively to eliminate any potential accident hazards existing in operations under their jurisdiction. Aboard ship, supervisory personnel must perform the functions of shore station safety directors. Each supervisor shall also comply with the following regulations:

a. Explain to all personnel under his/her immediate supervision the standard safety regulations, industrial hygiene safeguards, and precautions that they must follow and enforce regarding the observance of all safety regulations by personnel. The supervisor shall explain the safe distances as they apply to RF energy and lasers.

b. Instruct and train personnel under his/her immediate supervision in the work that they are to perform, whether instruction is given directly or through experienced operators, until the supervisor is satisfied that all personnel are capable of performing the work safely. This instruction shall also encompass complete information concerning transmitter location, identification, adherence to all RF and laser warning signs and placards, and observance of all safety circles and other safety zones.

c. Ensure that personnel are qualified and certified to perform the job assigned and that such certification is current. Report promptly to his/her immediate superior all personnel who, in his/her opinion, are not qualified for their assigned work.

d. Investigate or assist in the investigation of all accidents involving operations, equipment, or personnel under his/her supervision, and report or assist in the preparation of the report on the investigation's results to higher authority for appropriate action.

e. Identify all persons entering or approaching a radiation hazards (RADHAZ) area in his/her charge, and determine their authority to enter and/or remain in the area. Exercise his/

her authority to eject any person whose presence and/or actions, in his/her opinion, are detrimental to safety.

f. Forbid any major repairs or modification to any transmitting equipment except in accordance with specific instructions of the commanding officer. Enforce the safety requirements in his/her area.

g. Ascertain that all conditions in the area under his/her jurisdiction comply with orders relating to operation shutdown. When the operation is not relieved by an incoming shift, the supervisor shall make certain that all transmitters are shut off. When an incoming shift relieves his/her operation or he/she is relieved for any reason, the supervisor shall make a complete report to the relief of any situation that requires immediate attention or which should be kept under observation.

h. Enforce observance of the safety regulations concerning personnel protective clothing and equipment.

i. Report in writing to his/her commanding officer any requests, suggestions, and comments he/she may have with regard to safety standards.

1-3.6 SHIP AND SHORE OPERATING PERSONNEL. Operating personnel are responsible for understanding and strictly observing all safety standards, requirements, and precautions applicable to their work or duty. In addition, each individual will:

a. Report to his/her supervisor any unsafe condition, personnel actions, or any equipment or material that he/she considers unsafe.

b. Warn others whom he/she believes to be endangered by known hazards or by failure to observe safety precautions.

c. Wear or use approved protective clothing or equipment when required.

d. Report to his/her supervisor any injury or evidence of impaired health to himself/herself or others occurring in the course of work or duty.

e. Be prepared, in the event of an unforeseen hazardous occurrence, to give an audible warning to the other employees and to exercise such reasonable caution as is appropriate to the situation.

f. Report the presence of unauthorized personnel in the work area to his/her supervisor.

1-4. PERSONNEL TRAINING

1-4.1 All personnel engaged in operations involving the use of RF transmitting equipment or laser devices shall be familiar with all phases of work which they will be required to perform. Included in their training will be instruction in the following:

a. RF and laser radiation hazards.

b. Sources of RF burns.

c. Detection of faulty transmitters or related equipments.

d. RADHAZ warning signs, devices, and controls.

e. Electrical characteristics of metallic objects.

f. Sources of RF hazards.

g. The characteristics of modified or new RF transmitting equipment.

h. Use of protective equipment.

i. Use of OPNAVINST 5100.23 (series), OPNAVINST 5100.19 (series), and this manual.

1-4.2 Films dealing with RF hazards are available for training purposes through regular channels. Film identification number for the series titled "Radio Frequency Radiation Hazards" is MN9682. Individual films in this series are as follows:

a. MN9682a - Radio Frequency Radiation Hazards - RF Hazards and Personnel Safety.

b. MN9682d - Radio Frequency Radiation Hazards - RF Burns, Causes and Effects.

1-5. PRECAUTIONS TO ENSURE THE SAFETY OF PERSONNEL

It is the responsibility of the commanding officer of each ship or shore station to implement the requirements contained in this manual, including the following:

a. Ensure that procedures are established whereby RF transmitting equipment is positively controlled and coordinated with personnel working near antennas, handling ordnance, and conducting fueling operations. Procedures for controlling laser operations also shall be generated.

b. Ensure that RF hazards associated with the operation of laser and radar transmitters (in both controlled and uncontrolled environments) are known to all personnel, and that the necessary safety precautions are implemented. See paragraph 2-2.1.2, for the definition of controlled and uncontrolled environments.

c. Have RF RADHAZ surveys conducted to determine the appropriate safety precautions for personnel and for operations involving fuel and ordnance. Requests for RF hazard surveys and information relating to shipboard HERP and HERO, or shore facility HERO, should be mailed to Commander, Dahlgren Division, Naval Surface Warfare Center,

J52/R. Needy, 17320 Dahlgren Road, Dahlgren, VA 22448-5100, or forwarded electronically to needyri@nswc.navy.mil. Requests may also be made by calling (540) 653-3446/8594 or DSN 249-3446/8594.

Requests for RF hazard surveys or information relating to shore facility HERP should be mailed to Space and Naval Warfare Systems Command, Code 323/W. Hammer, P.O. Box 19022, North Charleston, SC 29419-9022, or forwarded electronically to hammerw@spawar.navy.mil. Requests may also be made by calling (843) 218-4876.

Requests for laser system evaluations or range surveys should be submitted as described in paragraph 4-8, of this document.

d. Ensure that HERP, HERF, HERO, and laser considerations are included in all proposed changes to station or facility operations.

1-6. RADIO FREQUENCY AND LASER OVEREXPOSURE REPORTING REQUIREMENTS

Report all RF overexposure incidents in accordance with the requirements of OPNAVINST 5100.19 (series) for ship personnel and OPNAVINST 5100.23 (series) for shore personnel. Report laser overexposure incidents as per OPNAVINST 5100.27/MCO 5104.1 (series) and BUMEDINST 6470.23 (series).

1-7. DEFINITIONS AND ABBREVIATIONS

The definitions of the terms and the meaning of the abbreviations used are listed in appendix A.

1-8. REFERENCE DOCUMENTS

A list of reference documents applicable to this volume is presented in appendix B. These documents, together with ship and station instructions and notices, technical publications, and standard operating procedures shall be maintained in appropriate libraries. These documents are essential for complete understanding of the safety regulations contained herein.

1-9. BIOLOGICAL EFFECTS OF ELECTROMAGNETIC RADIATION (EMR) AND SAFE EXPOSURE LIMITS

Appendix C describes the biological effects of EMR on the human body and the limits to which the body can be safely exposed.

1-10. CALCULATIONS AND MEASUREMENTS OF ELECTROMAGNETIC FIELDS

The electromagnetic environment, the method for calculating power density in an electromagnetic field, and calculation aids for use in predicting RF radiation hazards are described in appendix D.

1-11. REPORTING OMISSIONS/ERRORS IN MANUAL

Ships, training activities, supply points, depots, Naval shipyards, and supervisors of shipbuilding are requested to arrange for the maximum practical use and evaluation of NAVSEA technical manuals. All errors, omissions, discrepancies, and suggestions for improvement to NAVSEA technical manuals shall be reported to the Commander, Naval Surface Warfare Center, Port Hueneme Division (NSWC/PHD) (Code 5E31), 4363 Missile Way, Port Hueneme, CA 93043-4307 on NAVSEA Technical Manual Deficiency/Evaluation Report (TMDER), NAVSEA Form 4160/1. A copy of NAVSEA TMDER Form 4160/1 is included at the end of this publication. For activities with internet access, this form may also be completed and processed using NSWC/PHD website: http://nsdsa.phdnswc.navy.mil. All feedback comments shall be thoroughly investigated and originators will be advised of TMDER resolution. If you prefer to submit a TMDER using a word file, click here TMDER

This page left intentionally blank

CHAPTER 2

HAZARDS OF ELECTROMAGNETIC RADIATION TO PERSONNEL

2-1. INTRODUCTION

2-1.1 GENERAL. This chapter discusses the hazards of electromagnetic radiation to personnel (HERP), as well as the means by which such radio-frequency (RF) hazards may be mitigated. Electromagnetic radiation (EMR), as discussed in this section, is referred to as nonionizing radiation, a form of radiation that does not have sufficient energy to cause ionization of atoms or molecules. Electromagnetic emissions from laser, radar, communication, and microwave sources are examples of nonionizing radiation.

Also included in this chapter is a list of personnel safe distances associated with currently operational Navy aircraft, as well as shipboard and shore-based RF transmitters. In the case of aircraft, the radiation pattern of the installed radar system is also provided. The biological hazards associated with electromagnetic (RF) radiation [as established by the Institute of Electrical and Electronics Engineers (IEEE) C95.1 Standards Committee, adopted by the Tri-Service Electromagnetic Radiation Panel, and presented in Department of Defense Instruction (DODINST) 6055.11] are discussed in appendix C. As technical agent for Naval Sea Systems Command (NAVSEA), Naval Surface Warfare Center, Dahlgren Division, Dahlgren, Virginia, is responsible for identifying potentially hazardous shipboard areas. Space and Naval Warfare Systems Command (SPAWAR), Charleston, South Carolina, is responsible for identifying potential hazardous shore facility areas and for ensuring that controls necessary to prevent biological injury to personnel are defined and implemented.

2-1.2 BACKGROUND. Radar and communication systems which use high-power RF transmitters and high-gain antennas represent a biological hazard to personnel working on, or in the vicinity of, these systems. The detrimental effects of overexposure to EMR are associated with an increase in overall body temperature or a temperature rise in specific organs of the body.

2-2. EMR HAZARDS TO PERSONNEL

2-2.1 PERMISSIBLE EXPOSURE LIMITS (PELS).

2-2.1.1 DODINST 6055.11 lists safe limits based upon established biological effects due to RF radiation (RFR) exposure over the frequency range of 3 kHz to 300 GHz. The biological effects have been determined to be a function of the specific absorption rate (SAR), which is frequency dependent and averaged over a 6-minute time period. A more detailed discussion of PELs and SARs is presented in appendix C.

2-2.1.2 Exposure limits are specified for locations that are defined as either controlled or uncontrolled environments. Controlled environments are areas (designated shipboard work/ equipment spaces, shipboard weather decks, and topside areas) where exposure to higher-than-normal levels of electromagnetic energy may be incurred by personnel who are aware of the potential for such exposure. Uncontrolled environments include public areas, living quarters, and work spaces where there is no expectation that higher electromagnetic environments should be encountered. Shore facilities will typically have a combination of controlled and uncontrolled environments, as defined by each command. A more detailed discussion of exposure limit guidelines is provided in appendix C. However, since these guidelines require further explanation and are subject to change, DODINST 6055.11 (series) should be consulted by persons responsible for conducting RF hazard analyses.

2-2.1.3 The exposure limits for controlled environments represent scientifically derived values to limit absorption of electromagnetic energy in the body and to restrict the magnitude of currents induced in the body. As a result, the amount of RF energy absorbed is insufficient to produce or cause any adverse health effects, even under repeated or long-term exposure conditions. The controlled environmental limits are the equivalent of personnel exposure standards for all individuals. In uncontrolled environments where access is not restricted or controlled, lower permissible RF exposure levels have been adopted. The reduced exposure limits permitted in uncontrolled environments reflect a consensus to minimize exposure levels outside well-defined areas and should not be interpreted as a disregard for any known adverse health risk. There are no shipboard topside environments defined as uncontrolled environments; therefore, this condition/situation is not discussed in detail in this report. For shore facilities, uncontrolled areas are determined by the local command authority.

2-2.1.4 In those cases where personnel in a controlled environment must be exposed to power densities greater than the continuous PEL, the use of time averaging may be employed to determine the safe stay-time. Intermittent (vice continuous) exposure times can be calculated as described in paragraph C-5 and in DODINST 6055.11.

2-2.1.5 Induced and Contact Currents. Induced and contact current exposure limit guidelines for controlled and uncontrolled environments are provided in tables C-2 and C-4, respectively. However, since these guidelines require further explanation and are subject to change, DODINST 6055.11 should be consulted by persons responsible for conducting hazard assessments.

2-2.1.6 Induced Current PEL. When a person is freely standing (not grasping a conductive object) in a radiated field, RF currents are induced into the body. As those induced currents flow between the human body and ground, heat is produced, particularly in the constricted area of the ankles. For frequencies between 100 kHz and 100 MHz, current induced through the feet in a controlled environment is limited to 100 mA if measured through one foot, or 200 mA if measured through both feet. The 200-mA limit through both feet assures that localized SARs will not exceed the 20-W/kg limit for extremities.

2-2.1.7 Contact Current PEL. Contact current, or "grasping contact" current, is the current which flows through the hand(s) when a person grasps a conductive object while in a radiated

field. The contact current (PEL) in a controlled environment is 100 mA for the hand in contact with the ungrounded surface. This limit provides assurance that the 20-W/kg extremities limit will not be exceeded.

The present procedure for measuring this limit of contact or "grasping contact" current for the shipboard and shore radiation hazards (RADHAZ) survey is to measure only those items which are grasped during their normal operation or use, such as life lines or rails. Currently, a Type 3 RADHAZ warning sign (RF Burn) is posted in the vicinity of these items to denote a contact-current hazard. For items which are grasped during normal operations (e.g., signal lights), Type 5 warning signs are used to provide specific control measures. RADHAZ warning sign formats are shown in figure 2-1.

2-2.1.8 RF Burn Criteria. The nature of RF burns, how they occur, and procedures for minimizing their effects are contained in chapter 3 of this document, from which the following excerpt is extracted:

> An RF burn is the result of RF current flow through that portion of the body in direct contact with a conductive object (in which an RF voltage has been induced) or at the site of a spark discharge (no direct contact with a conductive object). Any burn injury that occurs is entirely the result of heat produced by current flow through the resistance of the skin. Current flow through a resistance produces heat regardless of the nature of the circuit.

As discussed in chapter 3, the established criteria is that an open-circuit voltage exceeding 140 volts on an item in an RFR field is to be considered potentially hazardous. The effect of the heat on a person ranges from warmth to painful burns. However, field tests have shown that, because of the many variables involved, it is not uncommon to encounter significantly higher voltages that will not cause an RF burn. The term "hazard" can range from visible skin damage to a shock sensation. The specific level at which contact with RF voltages should be classified an RF burn hazard is not a distinct one; however, 140 volts is recognized as the PEL, and a Type 3 RADHAZ warning sign (RF Burn) is posted in the vicinity of these items to denote an RF burn hazard. RADHAZ warning sign formats are shown in figure 2-1.

2-2.1.9 NAVSEA, Code 53H, is responsible for determining hazardous shipboard areas and ensuring that the possibility of biological injury to personnel from RF radiation is minimized or eliminated. Theoretical calculations and RF field-intensity and power-density measurements are used to establish the safe distances from radar antennas. This information is then used to determine whether or not hazardous shipboard areas exist. Radiation inhibit zones are used to minimize the number of hazardous areas. Appropriate warning signs, warning instructions, and/or markings shall be posted in all hazardous areas subject to entry by personnel.

2-2.1.10 For shipboard situations, weather decks, enclosed and open masts, and electronic work spaces (at a minimum) should be considered controlled environments. For shore stations, accessible areas beyond the stations' perimeter fence lines (at a minimum) should be considered uncontrolled environments.

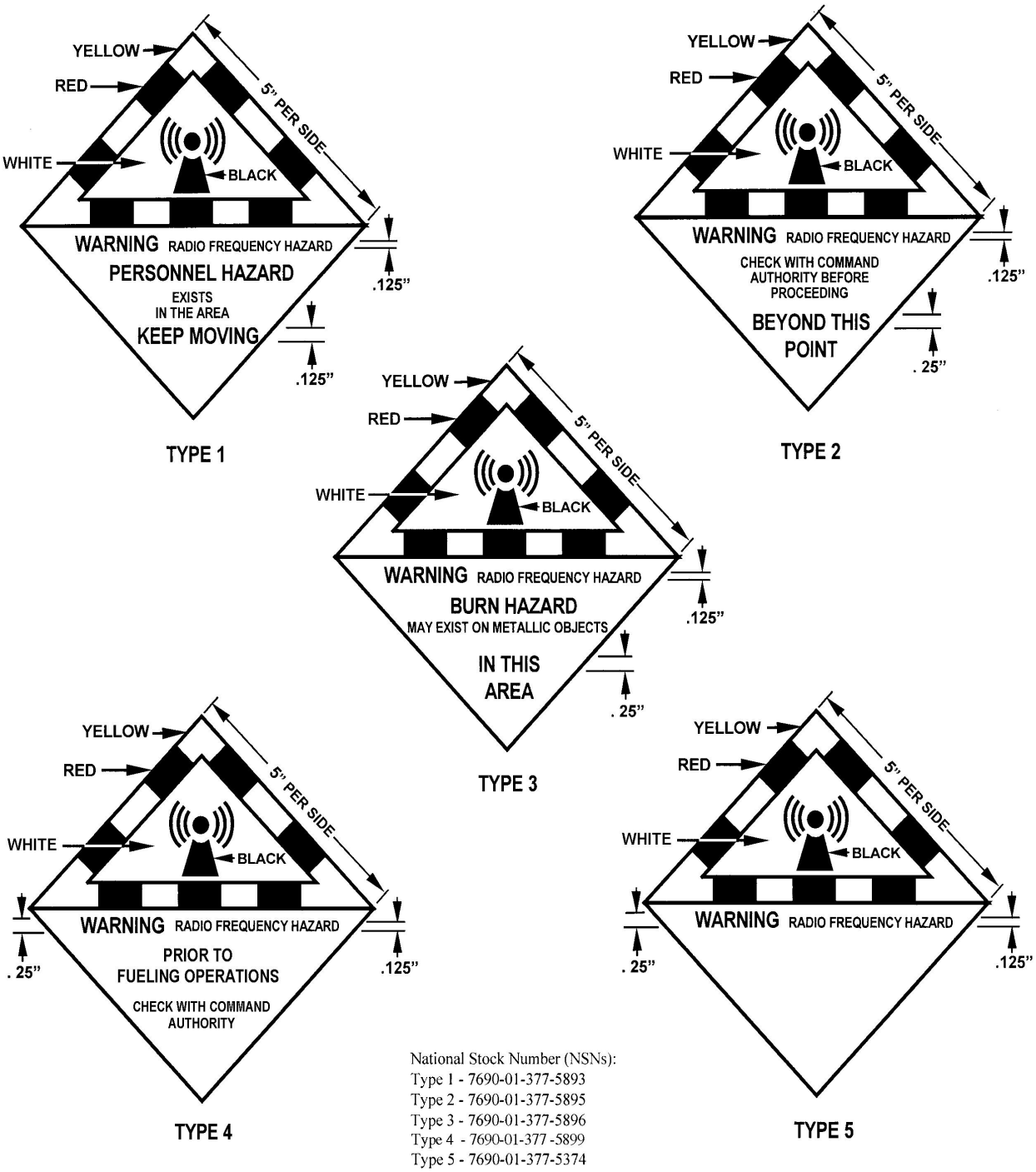

National Stock Number (NSNs):
Type 1 - 7690-01-377-5893
Type 2 - 7690-01-377-5895
Type 3 - 7690-01-377-5896
Type 4 - 7690-01-377 -5899
Type 5 - 7690-01-377-5374

FIGURE 2-1. RADHAZ Warning Sign Formats

2-2.1.11 No special RF exposure limits or additional RF exposure restrictions are imposed in the case of pregnancy.

2-2.2 WARNING SIGNS, DEVICES, AND CONTROLS.

2-2.2.1 RADHAZ Warning Signs. RADHAZ warning signs have been developed to advise personnel of the hazards of EMR. The format of these signs conforms with national and international standards. The RADHAZ warning sign formats are provided, along with the National Stock Numbers, in figure 2-1.

2-2.2.2 Variations, to include subdued signs for camouflage or tactical reasons, or to provide improved visibility under certain lighting conditions, are authorized, provided the general layout of the sign remains the same.

2-2.2.3 When required by military operational considerations, commanders may waive the requirement for signs, provided personnel are informed of possible hazards by other means.

2-2.2.4 Type 1 Warning Sign. The Type 1 warning sign advises personnel of an RF hazard and shall be posted at the boundary (PEL line) of an area, beyond which the PEL may be exceeded (see paragraph 2-2.2.9). Personnel may pass through this area but must not linger. If personnel are required to remain in the area, they must contact the cognizant command authority, who will ensure that procedures are implemented to limit RF exposure to a level below PEL. Type 1 warning signs shall never be posted in an area undefined by a PEL line.

2-2.2.5 Type 2 Warning Sign. The Type 2 warning sign excludes personnel from proceeding past a designated point. The sign informs personnel to check with command authority before proceeding beyond this point. This sign is normally posted at access points to RADHAZ restricted zones, such as masts and high-power antenna platforms, and in the vicinity of normally occupied areas which have RADHAZ barriers or personnel barriers to restrict access.

2-2.2.6 Type 3 Warning Sign. The Type 3 warning sign informs personnel that contact current and/or RF burn hazards may exist on metallic objects in this area. The Type 3 sign is used to denote RF hazards due to contact with metallic objects in the area and is normally posted on the metallic object that presents the worst hazard. Personnel should be aware that this hazard may also exist on other metallic objects in the area. An RF burn hazard may exist when either the RF voltage or contact current PEL is exceeded. Additional RADHAZ control measures (i.e., Type 5 RADHAZ sign) may be required to ensure that this hazard is limited to levels that do not exceed the PEL on metallic objects that personnel must grasp, such as signal lights and binoculars.

2-2.2.7 Type 4 Warning Sign. The Type 4 warning sign informs personnel that an RF hazard exists and to check with command authority prior to fueling operations. Further instructions are then provided that may include limitation on transmitter power or silence of specific transmitting antennas. This sign is usually placed next to a fuel storage and/or refueling station.

2-2.2.8 Type 5 Warning Sign. The Type 5 warning sign provides a blank area in which special instructions necessary for safe operations can be specified. Often, the sign provides operators and maintenance personnel with specific frequency and/or power limitation information for the safe operation of the antenna systems associated with the RF transmitting equipment. The Type 5 sign may also be used to inform personnel to contact command authority prior to operation of equipment in order to prevent an RF hazard to the operator or other personnel. The Type 5 sign should be posted in clear view of system operators.

2-2.2.9 PEL Line. A PEL line is used to mark a deck area where precautionary measures are required to minimize the possibility of personnel exposure to RFR in excess of the PEL. The PEL line is a 4-inch-wide red line (usually a circle or semicircle) painted on the deck to mark the boundary of an area surrounding an antenna where the PEL can be exceeded. When a PEL line is used, a Type 1 RADHAZ warning sign is posted on the PEL line to advise personnel that a hazard may exist and that they must keep moving. Personnel outside the PEL line need not take precautionary measures; however, when it is necessary for personnel to be within the marked areas, they must contact appropriate personnel who will ensure that operational procedures are implemented to limit RF exposure to a level below the PEL.

2-2.2.10 Red Warning Bands. A red warning band is used to mark a safety rail or life rail where precautionary measures are required in order to minimize the possibility of exposure to contact currents in excess of the PEL. The red warning band is a 4-inch-wide red line painted on the top of the safety rail to mark the boundary of an area in proximity to an antenna where the PEL can be exceeded. Where a red warning band is used, a Type 3 RADHAZ warning sign is posted to advise personnel that an RF burn hazard may exist. In those cases where further information or clarification is required, a Type 5 RADHAZ sign should be used.

2-2.2.11 Personnel Barriers. In areas where access to levels greater than 10 times the exposure limits for controlled environments may exist, warning signs alone do not provide sufficient protection. Devices such as flashing lights, audible signals, barriers, and/or interlocks shall be installed to prevent inadvertent access. The specific device(s) employed will be determined by the certifying authority based on the potential for exposure.

Personnel barriers are devices that restrict personnel access to an antenna or area where the PEL can be exceeded. The personnel barrier may be a fixed one, such as a permanent fenced area around an antenna. If no access to the antenna is provided, personnel barriers are not required. If there is an access opening, a temporary barrier (i.e., nylon rope) may be used to restrict personnel access. In this case, a Type 2 warning sign is also posted on a placard, which is normally attached to the nylon rope.

2-2.2.12 Frequency and/or Power Management. Frequency and/or power management restrictions may be employed to ensure that personnel are not exposed to RF energy in excess of the authorized PEL. Such restrictions may be imposed to limit RF exposure within a RADHAZ area defined by PEL lines, or to limit RF contact current on items that personnel are required to grasp while performing their assigned task. The HERP/Hazards of Electromagnetic Radiation to Fuel (HERF) Technical Report (prepared following a HERP/HERF survey) provides

specific guidance and recommended operating procedures to manage potential RF hazards. These procedures may include one or more of the following:

a. Refrain from using the antenna.

b. Reduce power for the frequencies at which the PEL is exceeded.

c. Refrain from using frequencies at which the PEL is exceeded.

Type 5 warning signs are used to provide operator or maintenance personnel with the frequency and/or power management requirements.

2-2.3 CALCULATED HERP STANDOFF DISTANCES. The HERP standoff distances listed in table 2-1 and table 2-4 are considered to be those distances from a transmitting antenna where the radiated field intensity is equal to the continuous exposure (whole body) PEL for controlled environments specified in DODINST 6055.11 (series). The standoff distances were calculated using power density modeling programs developed by NAVSEA and based upon currently available system electrical specifications. In most cases, these calculated distances are based upon worst-case conditions as no system installation losses were considered.

NOTE

While phased-array antenna systems do not physically rotate, their moving beam characteristics are equivalent to rotating-beam systems.

2-2.3.1 The HERP standoff distances noted in tables 2-1 through 2-4 are based on the assumption that the specified system uses a fixed (nonrotating) antenna. However, with the exception of communication systems (i.e., HF, VHF, UHF, and satellite systems), most shipboard and land-based radar systems use rotating-beam antennas. Typically, there will be no HERP concerns (hazards) associated with rotating-beam systems, since the intermittent exposure time per radar sweep will result in exposures which do not exceed the continuous-exposure PEL. However, since rotating-beam systems may be operated in a fixed mode during certain evolutions, it is essential that personnel be aware of the potential hazards associated with this mode of operation.

2-2.4 RADIO FREQUENCY EQUIPMENT HAZARDS.

2-2.4.1 Tables 2-1 through 2-5 list the most common shipboard, shore-based, and aircraft RF transmitters capable of producing potentially harmful levels of EMR. The HERP standoff distances specified in these tables are based on the PELs for controlled environments that appear in appendix C. The information was modified (where noted) by actual measurements obtained during shipboard or shore-station RF surveys. Requests for assistance in making such measurements for ship equipment should be directed to Commander, Dahlgren Division, Naval Surface Warfare Center, J52/R. Needy, 17320 Dahlgren Road, Dahlgren, VA 22448-5100, (540) 653-3446/8594 or DSN 249-3446, or forwarded electronically to needyri@nswc.navy.mil. Requests pertaining to shore-based equipment should be directed to

Space and Naval Warfare Systems Command, Code 323/W. Hammer, P.O. Box 19022, Charleston, SC 29419-9022, (843) 218-4876 or DSN 588-4876, or forwarded electronically to hammerw@spawar.navy.mil.

2-2.4.2 Before personnel are exposed to RF energy from radar and/or communication equipment not listed in tables 2-1 through 2-5, the HERP safe standoff distance shall be determined. This information is normally contained in the command's HERP survey.

The HERP certification survey for modified or newly installed shipboard equipment shall be obtained by contacting Commander, Dahlgren Division, Naval Surface Warfare Center, J52/ R. Needy, 17320 Dahlgren Road, Dahlgren, VA 22448-5100, (540) 653-3446/8594 or DSN 249-3446, or via e-mail (needyri@nswc.navy.mil). For information pertaining to shore-based equipment, contact Space and Naval Warfare Systems Command, Code 323/W. Hammer, P.O. Box 19022, Charleston, SC 29419-9022, (843) 218-4876 or DSN 588-4876, or via e-mail (hammerw@spawar.navy.mil).

2-2.4.3 Operational and/or maintenance requirements that expose personnel to RF environments in excess of the (controlled environment) PELs appearing in appendix C may be permitted using time-averaging (vice continuous-exposure) criteria. Because of the complexity of this calculation, the recommended procedure for shipboard equipment is to contact Commander, Dahlgren Division, Naval Surface Warfare Center, J52/R. Needy, 17320 Dahlgren Road, Dahlgren, VA 22448-5100, (540) 653-3446/8594 or DSN 249-3446, or via e-mail (needyri@nswc.navy.mil). For information pertaining to shore-based equipment, contact Space and Naval Warfare Systems Command, Code 323/W. Hammer, P.O. Box 19022, Charleston, SC 29419-9022, (843) 218-4876 or DSN 588-4876, or via e-mail (hammerw@spawar.navy.mil).

2-2.5 AIRCRAFT RADAR HAZARDS.

2-2.5.1 Table 2-5 lists the PEL and HERP fixed-beam standoff distances associated with the aircraft radar systems specified. Figure 2-2 depicts the radiation patterns and HERP safe separation distances associated with these systems. Many of the listed aircraft are equipped with landing-gear interlock (weight-on-wheels) switches which make it impossible to energize the radar transmitter until one or more deliberate actions have been taken. All personnel who operate or work in the vicinity of aircraft radar transmitters on deck shall be familiar with the RADHAZ zones around the aircraft. Maintenance personnel who bypass such safety interlocks shall ensure that safety zones are established and that personnel are alerted to the potential hazard. Maintenance personnel shall also ensure that interlock bypass switches are returned to their normal positions at the completion of maintenance.

2-2.5.2 Unlike most shipboard and land-based systems, aircraft radars do not typically rotate. Rather, such systems scan (sweep) the airspace to the left and right of the aircraft centerline. In most cases, the scan can be narrowed by the operator to just a few degrees either side of center. Therefore, for airborne radars, the HERP fixed-beam standoff distance and scan limits specified in table 2-5 and figure 2-2 should always be maintained during ground radar operation.

2-3. HERP STANDOFF DISTANCE TABLES

The HERP standoff distances appearing in tables 2-1 through 2-5 are based on the PELs for controlled environments that appear in appendix C. Since the system operating characteristics (frequency, average power, effective radiated power) required to calculate HERP standoff distances are often classified, this information has not been included in tables 2-1 through 2-5.

Because a given communication system may employ a variety of antennas (monopole, dipole, Yagi, log periodic, etc.), reference to a specific antenna type has been omitted from tables 2-1 and 2-2. Instead, antenna gain information has been provided to aid in determining the appropriate safe standoff distance for a particular communication system.

Table 2-1. Shipboard Communication and Satellite Systems

TRANSMITTER NAME	ANTENNA GAIN (dBi)	PEL (mW/cm^2)	HERP SAFE STANDOFF DISTANCE		ROTATING BEAM HAZARD
			(Meters)	(Feet)	
8400 STD	2.1	1.00	0.6	2	N/A
AN/ARC-159	2.1	0.75	0.9	3	N/A
AN/ARC-182	2.1	1.00	0.6	2	N/A
AN/ARC-182(V)	3.0	1.00	0.9	3	N/A
AN/GRC-171	2.1	1.00	0.9	3	N/A
AN/GRC-211	2.1	1.00	0.9	3	N/A
AN/GRC-226(V)4	2.1	4.50	0.3	1	N/A
AN/GRT-21(V)	2.1	1.00	0.9	3	N/A
AN/MRC-142	28.0	4.50	1.8	6	N/A
AN/PRC-113(V)	2.1	1.00	0.6	2	N/A
AN/PRC-117F	2.1	1.00	1.8	6	N/A
AN/PRC-119A	1.0	1.00	0.3	1	N/A
AN/PSC-3	6.0	1.00	0.9	3	N/A
AN/PSC-5	3.0	1.00	0.6	2	N/A
AN/SRC-22(V)	2.1	1.00	0.3	1	N/A
AN/SRC-40	2.1	1.00	0.3	1	N/A
AN/SRC-41	2.1	1.10	0.3	1	N/A
AN/SRC-47(V)	1.0	1.10	0.3	1	N/A
	2.1	1.10	0.3	1	N/A
AN/SRC-54	0.0	1.00	0.9	3	N/A
	2.1	1.00	0.9	3	N/A
AN/SRC-54B	2.1	1.00	0.9	3	N/A
AN/SRC-55	2.1	1.30	0.6	0	N/A
	5.1	1.30	0.9	0	N/A
AN/SRC-57	0.0	4.50	0.6	2	N/A
AN/SRQ-4	Classified	10.00	0.3	1	N/A
	Classified	10.00	2.1	7	N/A
AN/SRQ-4A	Classified	10.00	0.1	1	N/A
	Classified	10.00	2.1	7	N/A
AN/TSC-93	43.5	10.00	94.5	310	N/A
AN/TSC-93B	42.5	10.00	84.1	276	N/A
AN/TSQ-129	6.0	1.40	1.5	5	N/A
AN/URC-100	2.1	1.00	0.3	1	N/A
AN/URC-101	2.1	1.00	0.3	1	N/A
AN/URC-107B	2.1	3.20	0.9	3	N/A
AN/URC-109 (Series)	2.1 (2-9 MHz)	11.10	1.2	4	N/A
	2.1 (9-30 MHz)	1.00	3.7	12	N/A
	2.1 (2-30 MHz)	1.00	3.7	12	N/A

Table 2-1. Shipboard Communication and Satellite Systems

TRANSMITTER NAME	ANTENNA GAIN (dBi)	PEL (mW/cm^2)	HERP SAFE STANDOFF DISTANCE		ROTATING BEAM HAZARD
			(Meters)	(Feet)	
AN/URC-131 (Series)	2.1 (2-9 MHz)	11.10	5.2	17	N/A
	2.1 (9-30 MHz)	1.00	5.2	17	N/A
	2.1 (2-30 MHz)	1.00	3.7	12	N/A
AN/URC-139	0.0	1.00	0.6	2	N/A
	2.1	1.00	0.6	2	N/A
AN/URC-139(V)	2.1	1.00	0.6	2	N/A
AN/URC-80(V)5	2.1	1.00	0.6	2	N/A
AN/URC-80(V)6	2.1	1.00	0.6	2	N/A
AN/URC-86	2.1	1.00	0.6	2	N/A
AN/URC-93(V)1	1.7	1.00	0.9	3	N/A
	2.1	1.00	1.2	4	N/A
AN/URC-93(V)2	2.1	1.00	1.2	4	N/A
	5.0	1.00	1.8	6	N/A
AN/URC-93A(V)1	2.1	1.00	0.9	3	N/A
AN/URC-94	0.0	1.00	0.9	3	N/A
AN/URT-23 (Series)	2.1 (2-6 MHz)	25.00	0.9	3	N/A
	2.1 (2-30 MHz)	1.00	3.7	12	N/A
	2.1 (10-30 MHz)	1.00	3.7	12	N/A
	2.1 (4-12 MHz)	6.25	1.5	5	N/A
	2.1 (4-30 MHz)	1.00	3.7	12	N/A
AN/USC-38(V)	48.5	10.00	93.0	305	N/A
AN/USC-38(V)9 FOT	46.6	10.00	0.0	0	N/A
AN/USG-2 (CEC)	Classified	10.00	23.1	76	N/A
AN/USQ-123(V) CHBDL	36.5	10.00	0.0	0	N/A
AN/VRC-46	2.1	1.00	0.9	3	N/A
	6.0	1.00	1.5	5	N/A
AN/VRC-90A	0.0	1.00	0.9	3	N/A
AN/VRC-93(V)	0.0	1.00	0.9	3	N/A
AN/VRC-94	2.1	1.00	0.9	3	N/A
AN/WRC-1B	2.1	1.00	1.2	4	N/A
AN/WSC-3(V)3	12.0	1.00	1.2	4	N/A
AN/WSC-3(V)6	2.1	1.00	0.0	0	N/A
	5.0	1.00	0.0	0	N/A
	12.0	1.00	1.2	4	N/A
AN/WSC-3(V)7	1.7	1.00	0.0	0	N/A
	2.1	1.00	0.0	0	N/A
	5.0	1.00	0.0	0	N/A
	12.0	1.00	1.2	4	N/A
AN/WSC-3(V)10	2.1	1.00	0.0	0	N/A

Table 2-1. Shipboard Communication and Satellite Systems

TRANSMITTER NAME	ANTENNA GAIN (dBi)	PEL (mW/cm^2)	HERP SAFE STANDOFF DISTANCE		ROTATING BEAM HAZARD
			(Meters)	(Feet)	
AN/WSC-3(V)11	1.7	1.00	0.0	0	N/A
	2.1	1.00	0.0	0	N/A
AN/WSC-3(V)14	2.1	1.00	0.0	0	N/A
AN/WSC-3(V)15	2.1	1.00	0.0	0	N/A
	12.0	1.00	1.2	4	N/A
AN/WSC-3(V)17	12.0	1.00	1.2	4	N/A
AN/WSC-3A(V)3	12.0	1.00	1.2	4	N/A
AN/WSC-3A(V)15	12.0	1.00	1.2	4	N/A
AN/WSC-6(V)4 & (V)5 7-ft dish @ 350 Watts	44.9	10.00	62.9	203	N/A
7-ft dish @ 2000 Watts	44.9	10.00	191.1	627	N/A
AN/WSC-6(V)7	42.5	10.00	100.6	330	N/A
AN/WSC-6(V)9 X-BAND	41.2	10.00	64.0	210	N/A
C-BAND	38.7	10.00	39.6	130	N/A
AN/WSC-8(V)1 & (V)2	42.8	10.00	72.2	237	N/A
FM 2610	6.1	1.00	0.9	3	N/A
FM 8500	2.1	1.00	0.6	2	N/A
	5.0	1.00	0.9	3	N/A
GM 300	0.9	1.50	0.3	1	N/A
GX 2330S STD	8.0	1.00	1.2	4	N/A
HORIZON OMNI	2.1	1.00	0.6	2	N/A
HORIZON TITAN	2.1	1.00	0.6	2	N/A
IC 751A	2.1	18.40	0.3	1	N/A
ICM 56	8.0	1.00	1.2	4	N/A
ICM 57	2.1	1.00	0.6	2	N/A
	6.0	1.00	0.9	3	N/A
ICM 58	2.1	1.00	0.6	2	N/A
	6.0	1.00	0.9	3	N/A
ICM 80	2.1	1.00	0.6	2	N/A
ICM 100	2.1	1.00	0.6	2	N/A
ICM 125	2.1	1.00	0.6	2	N/A
ICM 125A	2.1	1.00	0.6	2	N/A
ICM 125D	2.1	1.00	0.6	2	N/A
ICM 126	2.1	1.00	0.6	2	N/A
ICM 127	2.1	1.00	0.6	2	N/A
INMARSAT MX-2400	23.9	5.45	2.7	9	N/A
SATURN 3S.90	23.9	5.45	2.7	9	N/A
JHS-32A	2.1	1.00	0.6	2	N/A

Table 2-1. Shipboard Communication and Satellite Systems

TRANSMITTER NAME	ANTENNA GAIN (dBi)	PEL (mW/cm^2)	HERP SAFE STANDOFF DISTANCE		ROTATING BEAM HAZARD
			(Meters)	(Feet)	
LST-5C	1.0	1.00	0.3	1	N/A
M-200 MOTOROLA	2.1	1.00	0.6	2	N/A
MINI-INMARSAT NERA	11.4	5.45	0.0	0	N/A
MOTOROLA TRITON	8.1	1.00	1.2	4	N/A
MX-8102	2.1	1.00	0.6	2	N/A
NRE 332	2.1	1.00	0.6	2	N/A
OBT	6.0	1.00	0.9	3	N/A
RAY JEFFERSON	2.1	1.00	0.6	2	N/A
RAYNAV 55	2.1	1.00	0.6	2	N/A
RAYTHEON 53A	2.1	1.00	0.6	2	N/A
RAYTHEON 77	2.1	1.00	0.6	2	N/A
RAYTHEON 90 (VHF FM)	2.1	1.00	0.6	2	N/A
RAYTHEON 201	6.0	1.00	0.9	3	N/A
	2.1	1.00	0.6	2	N/A
RAYTHEON 202	2.1	1.00	0.6	2	N/A
RAYTHEON 780 (VHF FM)	2.1	1.00	0.6	2	N/A
RT-1319/URC	2.1	1.00	0.6	2	N/A
STANDARD GX2341B	2.1	1.00	0.6	2	N/A
STD HORIZON	2.1	1.00	0.6	2	N/A
	8.1	1.00	1.2	4	N/A
STD HORIZON NOVA	6.0	1.00	0.9	3	N/A
STD HORIZON OMNI	6.0	1.00	0.9	3	N/A
STD HORIZON TITAN	2.1	1.00	0.6	2	N/A
T-1322 (Series)	2.1 (2-6 MHz)	25.00	0.9	3	N/A
	2.1 (2-30 MHz)	1.00	3.7	12	N/A
	2.1 (4-12 MHz)	6.25	1.5	5	N/A
	2.1 (10-30 MHz)	1.00	3.7	12	N/A
TKM 507	2.1	1.00	0.6	2	N/A
TRITON II	6.1	1.00	0.9	3	N/A
TS 850S KENWOOD	2.1	1.00	1.2	4	N/A

Table 2-2. Shore-Based Communication and Satellite Systems

TRANSMITTER NAME	ANTENNA GAIN (dBi)	PEL (mW/cm^2)	HERP SAFE STANDOFF DISTANCE		ROTATING BEAM HAZARD
			(Meters)	(Feet)	
AN/FRC-30	3.0	1.10	7.6	25	N/A
AN/FRC-36	3.0	1.00	0.9	3	N/A
AN/FRC-52	2.1	1.00	0.9	3	N/A
AN/FRC-52A	2.1	1.00	0.9	3	N/A
AN/FRC-59	2.1	1.00	0.8	3	N/A
AN/FRC-59A	2.1	1.00	0.8	3	N/A
AN/FRC-70	2.1	1.00	1.2	4	N/A
AN/FRC-70A	2.1	1.00	1.2	4	N/A
AN/FRC-83	3.0	1.00	1.2	4	N/A
AN/FRC-84	37.5	10.00	1.5	5	N/A
AN/FRC-93 (Series)	10.0	1.00	6.4	21	N/A
AN/FRC-109 (Series)	37.5	10.00	2.1	7	N/A
AN/FRC-143	3.0	1.00	1.5	5	N/A
AN/FRC-144	2.1	1.00	1.2	4	N/A
AN/FRC-149	40.3	10.00	2.5	9	N/A
AN/FRC-150	3.0	1.00	0.9	3	N/A
AN/FRC-153 (Series)	3.0	1.00	4.3	14	N/A
AN/FRC-162(V)8 (w/P1271 Antenna)	47.1	10.00	6.4	21	N/A
AN/FRC-162(V)8 (w/P4710D Antenna)	37.5	10.00	2.1	7	N/A
AN/FRC-166	2.2	1.00	0.9	3	N/A
AN/FRC-171 (Series)	40.3	10.00	4.3	14	N/A
AN/FRC-173 (Series)	40.3	10.00	4.3	14	N/A
AN/FRN-12A	2.1	1.00	1.8	6	N/A
AN/FRN-24	2.1	1.00	1.2	4	N/A
AN/FRN-29	4.5	1.00	1.2	4	N/A
AN/FRN-36	2.0	1.00	1.2	4	N/A
AN/FRN-39	1.5	1.00	0.3	2	N/A
AN/FRN-44	6.0	1.00	2.0	7	N/A
AN/FRT-24	3.0	1.00	4.3	14	N/A
AN/FRT-39 (Series)	3.0	1.10	12.1	40	N/A
AN/FRT-40 (Series)	3.0	1.10	24.0	79	N/A
AN/FRT-83 (Series)	8.0	1.10	9.8	32	N/A
AN/FRT-84(V)	4.0	1.00	6.4	21	N/A
AN/FRT-96	5.0	1.10	15.2	50	N/A

Table 2-2. Shore-Based Communication and Satellite Systems

TRANSMITTER NAME	ANTENNA GAIN (dBi)	PEL (mW/cm^2)	HERP SAFE STANDOFF DISTANCE		ROTATING BEAM HAZARD
			(Meters)	(Feet)	
AN/FSC-78	63.6	10.00	2595.9	8517	N/A
AN/FSC-79	60.0	10.00	2309.0	7574	N/A
AN/GRC-27	1.5	1.00	1.2	4	N/A
AN/GRC-27A	1.5	1.00	1.2	4	N/A
AN/GRC-112	6.0	1.00	7.0	23	N/A
AN/GRC-125	2.1	1.00	0.9	3	N/A
AN/GRC-134	1.5	1.00	1.2	4	N/A
AN/GRC-135	1.5	1.00	1.2	4	N/A
AN/GRC-135A	1.5	1.00	1.2	4	N/A
AN/GRC-160	2.1	1.00	0.9	3	N/A
AN/GRC-164	0.0	1.00	0.3	1	N/A
AN/GRC-168	3.0	1.00	0.6	2	N/A
AN/GRC-171	1.5	1.00	0.6	2	N/A
AN/GRC-175	4.0	1.00	0.9	3	N/A
AN/GRC-177	3.0	1.00	0.9	3	N/A
AN/GRC-193	2.2	1.10	2.4	8	N/A
AN/GRC-201	38.0	10.00	31.7	104	N/A
AN/GRC-212	12.0	1.00	35.7	117	N/A
AN/GRN-20	6.0	3.20	1.5	5	N/A
AN/GRN-25	22.0	1.00	2.7	9	N/A
AN/GRN-30(V)	28.0	1.00	11.3	37	N/A
AN/GRN-31(V)	16.0	1.10	1.5	5	N/A
AN/GRT-3	5.5	1.00	1.8	6	N/A
AN/GRT-20	5.5	1.00	1.2	4	N/A
AN/GRT-22	1.5	1.00	0.9	3	N/A
AN/GSC-39(V)1, 2	56.0	10.00	1082.7	3552	N/A
AN/GSQ-159	2.1	1.00	0.3	1	N/A
AN/MPS-38	38.0	7.00	78.0	256	N/A
AN/MRC-97A	2.1	1.00	0.9	3	N/A
AN/MRC-108 (HF)	400.0	1.00	3.4	11	N/A
AN/MRC-108 (UHF)	28.0	1.00	0.6	2	N/A
AN/MRC-108 (VHF)	65.0	1.00	0.9	3	N/A
AN/MRC-109	2.1	1.00	0.9	3	N/A
AN/MRC-110	2.1	1.00	0.9	3	N/A
AN/MRC-135	9.6	1.00	2.4	8	N/A
AN/MRC-138	5.0	1.00	3.4	11	N/A

Table 2-2. Shore-Based Communication and Satellite Systems

TRANSMITTER NAME	ANTENNA GAIN (dBi)	PEL (mW/cm^2)	HERP SAFE STANDOFF DISTANCE		ROTATING BEAM HAZARD
			(Meters)	(Feet)	
AN/MRN-18	2.0	3.20	0.9	3	N/A
AN/MSC-43	5.0	1.10	4.6	15	N/A
AN/MSC-46	58.0	10.00	501.1	1644	N/A
AN/PRC-25	2.0	1.00	0.3	1	N/A
AN/PRC-27	2.1	1.00	0.3	1	N/A
AN/PRC-41 (w/AS-1404 Antenna)	2.1	1.00	0.3	1	N/A
AN/PRC-41 (w/AS-1405 Antenna)	12.0	1.00	0.6	2	N/A
AN/PRC-75	0.0	1.00	0.3	1	N/A
AN/PRC-77	10.0	1.00	0.6	2	N/A
AN/PRC-77A	10.0	1.00	0.6	2	N/A
AN/PRC-104 (w/AS-2259 or AS-271A Antenna)	2.2	1.10	0.2	1	N/A
AN/PRC-104 (w/AT-1011 Antenna)	5.0	1.10	0.2	1	N/A
AN/PRC-118	6.0	1.00	1.5	5	N/A
AN/TLQ-17A	7.5	1.00	5.2	17	N/A
AN/TMQ-31	-0.3	1.00	0.6	2	N/A
AN/TRC-75 (w/AT-1011 Antenna)	5.0	1.10	4.6	15	N/A
AN/TRC-75 (w/GRA-50 Antenna)	2.2	1.10	3.4	11	N/A
AN/TRC-97 (w/AS-1731 Antenna)	38.0	10.00	71.0	233	N/A
AN/TRC-97 (w/AS-1939 Antenna)	20.0	10.00	9.1	30	N/A
AN/TRC-97A (10 Watts)	38.0	10.00	7.3	24	N/A
AN/TRC-97A (1000 Watts)	38.0	10.00	71.0	233	N/A
AN/TRC-166	2.0	1.00	0.3	1	N/A
AN/TRC-170(V)1	44.5	10.00	426.1	1398	N/A
AN/TRC-170(V)2, 5 Line of Sight	40.5	10.00	2.1	7	N/A
AN/TRC-170(V)2, 5 Troposcatter	40.5	10.00	133.8	439	N/A
AN/TRC-170(V)3 Line of Sight	36.5	10.00	1.5	5	N/A
AN/TRC-170(V)3 Troposcatter	36.5	10.00	84.4	277	N/A

Table 2-2. Shore-Based Communication and Satellite Systems

TRANSMITTER NAME	ANTENNA GAIN (dBi)	PEL (mW/cm^2)	HERP SAFE STANDOFF DISTANCE		ROTATING BEAM HAZARD
			(Meters)	(Feet)	
AN/TRC-176 (Series)	1.5	1.00	0.6	2	N/A
AN/TRN-33	1.5	1.00	0.9	3	N/A
AN/TSC-15	5.0	1.10	4.6	15	N/A
AN/TSC-54	52.0	10.00	794.1	2605	N/A
AN/TSC-85	43.5	10.00	298.4	979	N/A
AN/TSC-85(V)	43.5	10.00	298.4	979	N/A
AN/TSC-95	7.5	1.10	6.4	21	N/A
AN/TSC-96(V)	10.0	1.00	1.8	6	N/A
AN/TXQ-3 (w/TXR-4 System)	33.5	10.00	0.6	2	N/A
AN/TXQ-3 (w/TXT-3 System)	33.5	10.00	4.5	14	N/A
AN/VRC-17	2.1	1.00	0.6	2	N/A
AN/VRC-33	2.1	1.00	0.9	3	N/A
AN/VRC-42	2.1	1.00	0.6	2	N/A
AN/VRC-43	2.1	1.00	0.9	3	N/A
AN/VRC-46	3.0	1.00	1.2	4	N/A
AN/VRC-47	2.1	1.00	0.9	3	N/A
AN/VRC-49	2.1	1.00	0.9	3	N/A
AN/VRC-51	3.0	1.00	0.9	3	N/A
AN/VRC-52	2.1	1.00	0.6	2	N/A
AN/VRC-56	2.1	1.00	0.6	2	N/A
AN/VRC-60	2.1	1.00	0.9	3	N/A
AN/VRC-64	3.0	1.00	0.9	3	N/A
AN/VRC-68	2.1	1.00	0.6	2	N/A
AN/VRC-77	2.1	1.00	0.9	3	N/A
AN/VRC-78	2.1	1.00	0.6	2	N/A
AN/VRC-82(V)1	2.1	1.00	0.9	3	N/A
LST-5D	12.5	1.00	5.5	18	N/A

Table 2-3. Shipboard Radar and Navigation Systems

TRANSMITTER NAME	ANTENNA NAME	PEL (mW/cm^2)	HERP FIXED-BEAM STANDOFF DISTANCE		ROTATING BEAM HAZARD
			(Meters)	(Feet)	
1352 FURUNO	1352	10.00	0.6	2	None
1510D FURUNO	XN4A	10.00	1.5	5	None
1731 FURUNO	1731	10.00	0.6	2	None
1751 FURUNO	1751	10.00	2.4	8	None
1830 FURUNO	1830	10.00	0.6	2	None
1831 FURUNO	1831	10.00	0.6	2	None
1930 FURUNO	RSB-022	10.00	0.6	2	None
	1930	10.00	0.6	2	None
1931 FURUNO	1931	10.00	0.6	2	None
1940 FURUNO	1940	10.00	0.6	2	None
2010 FURUNO	2010	10.00	7.3	24	None
2115B FURUNO	FURUNO	10.00	1.5	5	None
2120 FURUNO	2120	10.00	6.4	21	None
803	803	10.00	0.9	3	None
AN/APX-72A	AS-177B/UPX	3.60	0.3	1	None
	AS-3020/SR	3.60	0.3	1	None
	AS-3021/SR	3.60	0.3	1	None
AN/BPS-14	AS-1640/BPS	10.00	11.2	37	None
AN/BPS-15	AS-1640B/BPS	10.00	3.0	10	None
AN/BPS-15A	AS-1640B/BPS	10.00	3.0	10	None
AN/BPS-15B	AS-1640B/BPS	10.00	3.0	10	None
AN/BPS-15C	AT-294/BPS-15	10.00	3.0	10	None
AN/BPS-15D	AS-996/BPS-9A	10.00	3.0	10	None
AN/BPS-15E	AS-1640B/BPS	10.00	3.0	10	None
AN/BPS-15F	AS-1640B/BPS	10.00	3.0	10	None
AN/BPS-16(V)1	AS-4316/BPS-16(V)	10.00	3.9	13	None
AN/BPS-16(V)2	AS-4316/BPS-16(V)	10.00	3.9	13	None
AN/SLQ-32(V)3	CW-1186	10.00	29.3	96	None
AN/SPG-60	MK 39				
CWI		10.00	280.4	920	None
TRACK		10.00	112.8	370	None
AN/SPG-62	AS-3444/SPG-62	10.00	353.6	1160	None
AN/SPN-35	AS-1292/TPN-8	10.00	14.3	47	None
	AS-1669/SPN-35	10.00	11.0	36	None
AN/SPN-41	AS-2580/UPN	10.00	0	0	None
AN/SPN-43	AS-2785A/SPN-43A	10.00	18.3	60	None
AN/SPN-46(V)	AS-3648/SPN-46(V)	10.00	3.1	10	None
AN/SPQ-9A	AS-2367A/SPQ-9	10.00	5.5	18	None
AN/SPQ-9B	AS-4499/SPQ	10.00	44.8	147	None

Table 2-3. Shipboard Radar and Navigation Systems

TRANSMITTER NAME	ANTENNA NAME	PEL (mW/cm^2)	HERP FIXED-BEAM STANDOFF DISTANCE		ROTATING BEAM HAZARD
			(Meters)	(Feet)	
AN/SPS-10B	AS-936B/SPS	10.00	13.1	43	None
AN/SPS-10F	AS-936B/SPS-10B	10.00	13.1	43	None
AN/SPS-40	AS-2782/SPS-40B	1.30	58.2	191	None
AN/SPS-48C	AS-1686/SPS-48				
Normal		10.00	319.4	1048	None
Burnthru		10.00	356.0	1168	None
AN/SPS-48E	AS-3752/SPS-48E	10.00	458.7	1505	None
AN/SPS-49(V)	AS-3263/SPS-49(V)	2.80	130.5	428	None
AN/SPS-55	AS-2953/SPS-55	10.00	5.5	18	None
AN/SPS-64(V)	AS-3194/SPS-64	10.00	< 1.2	< 4	None
AN/SPS-67(V)	AS-936A/SPS-10B	10.00	5.8	18	None
	AS-936B/SPS-10B	10.00	15.8	52	None
AN/SPS-73(V)	AS-4437/SPS-73(V)	10.00	0.9	3	None
AN/SPY-1A/B/D	various				
Low Power		10.00	15.2	50	None
High Power		10.00	109.7	360	None
Burnthru		10.00	164.6	540	None
AN/UPX-23	AS-177B/UPX	3.40	0.3	1	None
	AS-2188/U	3.40	0.9	3	None
	AS-3134/UPX	3.40	1.2	4	None
AN/UPX-25	AS-177B/UPX	3.40	0.3	1	None
	AS-2188/U	3.40	0.9	3	None
	AS-2189/U	3.40	0.9	3	None
AN/UPX-25(V)	AS-177B/UPX	3.40	0.3	1	None
	AS-2188/UPX	3.40	0.9	3	None
	AS-2189/U	3.40	0.9	3	None
AN/UPX-27	AS-177B/UPX	3.40	0.3	1	None
	AS-1065/UPX	3.40	1.5	5	None
	AS-2188A/U	3.40	0.9	3	None
	AS-2188/U	3.40	0.9	3	None
	AS-2189/UPX	3.40	0.9	3	None
	AS-3134/UPX	3.40	1.2	4	None
AN/UPX-28	AS-177B/UPX	3.60	0.3	1	None
	AS-3134/UPX	3.60	0.3	1	None
AN/URN-25(V)	AS-3240/URN	3.20	1.2	4	None
FCR 2825 FURUNO	2825	10.00	3.4	11	None
FCR 904 FURUNO	AM 2436	10.00	0.6	2	None
FCR 1030 FURUNO	XN8	10.00	1.5	5	None
FCR 1040 FURUNO	XN12A	10.00	0.6	2	None
FCR 1100 FURUNO	FCR 1040A FURUNO	10.00	3.7	12	None

Table 2-3. Shipboard Radar and Navigation Systems

TRANSMITTER NAME	ANTENNA NAME	PEL (mW/cm^2)	HERP FIXED-BEAM STANDOFF DISTANCE		ROTATING BEAM HAZARD
			(Meters)	(Feet)	
FCR 1411 FURUNO	XN4A	10.00	3.7	12	None
	FRC-1411	10.00	3.4	11	None
FR 1510 FURUNO	1510	10.00	0.6	2	None
FR 1510D FURUNO	XN3	10.00	0.6	2	None
FR 1942 FURUNO	RSB-0062	10.00	1.5	5	None
FR 2020 FURUNO	XN2	10.00	3.7	12	None
FR 2110 FURUNO	FURUNO	10.00	3.7	12	None
FR 8100D FURUNO	8100D	10.00	3.4	11	None
FR 8250D FURUNO	XN3	10.00	1.5	5	None
LN 66	201-760002 401	10.00	< 1.2	< 4	None
M821	RSB-0067	10.00	0.3	1	None
MARK 15 MOD (CIWS)	SEARCH**	10.00	10.7	83	None
	TRACK	10.00	36.6	116	None
MARK 23 MOD 3 TAS Low Power High Power	MK 48 MOD 1	4.20 4.20	22.9 36.9	75 121	None None
MARK 69 MOD 1	MK 53 MOD 2 SEARCH	10.00	61.6	202	None
	MK 53 MOD 2 TRACK	10.00	43.6	143	None
MARK 95 MOD (NSSMS)	MK 95 MOD	10.00	89.3	293	None
PATHFINDER	MODEL 1402	10.00	2.7	9	None
R 21X RAYTHEON	MB 9955	10.00	3.7	12	None
R 40X RAYTHEON	R40X	10.00	0.6	2	None
RAY 1206 RAYTHEON	RAY 1206	10.00	3.4	11	None
RDP 104 FURUNO	XN2	10.00	0.6	2	None
RF 7062 FURUNO	RF 7062	10.00	1.5	5	None

Table 2-4. Shore-Based Radar and Navigation Systems

TRANSMITTER NAME	ANTENNA NAME	PEL (mW/cm^2)	HERP FIXED-BEAM STANDOFF DISTANCE		ROTATING BEAM HAZARD
			(Meters)	(Feet)	
AN/FPN-28	AS-762/AS-763	10.00	55.2	181	None
	AS-964/GPN	9.30	32.6	107	None
AN/FPN-36	AS-866/FPN-33	10.00	21.3	70	None
	AS-867/FPN-33	10.00	26.8	88	None
AN/FPN-50	AS-519/GPN (Azimuth)	10.00	16.8	55	None
	AS-964/GPN	9.30	31.7	104	None
	AS-1208/MPN (Elevation)	10.00	20.7	68	None
AN/FPN-63(V)	AS-3161/UPN (Azimuth)	10.00	21.9	72	None
	AT-291/GPN (Elevation)	10.00	24.7	81	None
AN/FPS-8	AT-386/FPS-8	4.30	47.5	156	None
AN/FPS-16	AS-903/FPS-16	10.00	147.2	483	None
AN/FPS-16 Mod	ZZ/FPS-16 Mod	10.00	211.8	695	None
AN/FPS-16(V)	AS-903/FPS-16	10.00	73.8	242	None
AN/FPS-20Q	AT-572/FPS-20	4.20	161.0	528	None
AN/FPS-36	AS-847/FPS	4.20	43.9	144	None
AN/FPS-41	AS-2390/FPS-41	9.00	39.0	128	None
AN/FPS-68	OA-3413/FPS-68	10.00	24.1	79	None
AN/FPS-81	OA-3870/FPS-81	10.00	24.1	79	None
AN/FPS-81A	OA-3870/FPS-81	10.00	24.1	79	None
AN/FPS-105	ZZ/FPS-105	10.00	2.1	7	None
AN/FPS-106(V)1	OA-3870/FPS-81	10.00	24.1	79	None
AN/FPS-106(V)2	AS-2878/FPS-106	10.00	34.1	112	None
AN/FPS-114	AS-4005/FPS-114	9.60	38.7	127	None
AN/FPS-127	IAIA	8.70	2.7	9	None
AN/FPS-131	ZZ/TPS-76	10.00	72.8	239	None
AN/GPN-27	FA 9344	9.00	45.4	149	None
AN/GRN-9	OA-1547/URN	3.20	1.2	4	None
AN/GRN-9B	OA-1547/URN	3.20	1.2	4	None
AN/GRN-9C	OA-1547/URN	3.20	1.2	4	None
AN/MPN-5	AS-762/AS-763	10.00	57.0	187	None
	AS-964/GPN	9.30	32.6	107	None
AN/MPN-14	OA-642/MPN-11 (Elevation)	10.00	20.7	68	None
	OA-643/MPN-11 (Azimuth)	10.00	16.8	55	None
	ZZ/MPN-11 (Search)	9.30	36.9	121	None
AN/MPN-23(V)	OE-250-V/UPN (Elevation)	10.00	23.5	77	None
	OE-251-V/UPN (Azimuth)	10.00	22.0	72	None
AN/MPQ-46	ZZ/1193 RX	10.00	84.4	277	None
AN/MPS-25(V)	OA-1613/FPS-16	10.00	92.7	304	None

Table 2-4. Shore-Based Radar and Navigation Systems

TRANSMITTER NAME	ANTENNA NAME	PEL (mW/cm^2)	HERP FIXED-BEAM STANDOFF DISTANCE		ROTATING BEAM HAZARD
			(Meters)	(Feet)	
AN/MRN-16	AS-686/URN-3	3.20	0.9	3	None
AN/MRN-18, 18A	AS-686/URN-3	3.20	0.9	3	None
AN/MRN-21	AS-686/URN-3	3.20	0.9	3	None
AN/MSQ-51 (Acquisition)	ZZ/MSQ-51	10.00	60.0	197	None
AN/MSQ-51 (Track)	OA-4453/MSQ-51	10.00	23.8	78	None
AN/TPN-8	AS-1292/TPN-8	10.00	26.2	86	None
AN/TPN-8A	AS-2284/TPN-8A	10.00	27.7	91	None
AN/TPN-22	AS-3471/TPN-22	10.00	33.8	111	None
AN/TPN-30	AS-2579/UPN	10.00	2.4	8	None
	AS-2580/UPN	10.00	4.6	15	None
AN/TPQ-10	AT-918/TPQ-10	10.00	27.1	89	None
AN/TPQ-27	AS-3279/TPQ-27	10.00	130.4	428	None
AN/TPQ-36	OE-338/TPQ-36(V)	10.00	74.4	244	None
AN/TPS-22	OA-3447/TPS-22	1.30	169.1	555	None
AN/TPS-32	AS-2536/TPS-32	9.70	900.7	2955	None
AN/TPS-34	AS-1277/TPS-34	4.20	331.9	1089	None
AN/TPS-35	OA-4905/TPS-35	4.20	32.6	107	None
AN/TPS-40	OA-1196/MPS-16	10.00	120.3	395	None
AN/TPS-43	OE-48/TPS-43	9.70	190.5	625	None
AN/TPS-59	GE-7327402G1	4.00	223.7	734	None
AN/TPS-63	AS-4021/T	4.00	59.7	196	None
AN/TPX-42(V)3, 5	AN/GPA-123	3.40	2.1	7	None
	ZZ/TPX-49A	3.40	0.3	1	None
AN/TPX-42A(V)	AN/GPA-123	3.40	0.9	3	None
AN/TPX-42A(V)3, 5	AN/GPA-123	3.40	0.9	3	None
AN/TPX-42A(V)8	OE-XXX/UPX	3.40	0.9	3	None
AN/TRN-28	AS-2579/UPN	10.00	3.4	11	None
	AS-2580/UPN	10.00	6.4	21	None
AN/UPS-1A thru -1F	ZZ/UPS-1 TYPE 2	4.20	38.7	127	None
AN/URN-3	OA-553/URN	3.20	1.5	5	None
AN/URN-3A	AS-685/URN-3	3.20	0.9	3	None

Table 2-5. Aircraft Radar Systems

AIRCRAFT PLATFORM	RADAR SYSTEM	PEL (mW/cm^2)	HERP FIXED-BEAM STANDOFF DISTANCE†		ROTATING BEAM HAZARD‡
			(Meters)	(Feet)	
A/V-8B HARRIER	AN/APG-65	10.0	40.8	134.0	N/A
C-2 GREYHOUND	PRIMUS 870	10.0	1.2	4.0	N/A
C-9B SKYTRAIN	BENDIX/KING RDR-1E	10.0	12.8	42.0	N/A
C-20 GULFSTREAM IV	PRIMUS 870	10.0	1.2	4.0	N/A
C-37 GULFSTREAM V	PRIMUS 880	10.0	3.1	10.0	N/A
C-40A CLIPPER	RAYTHEON WXR-2100	10.0	14.8	49.0	N/A
C-130 HERCULES	AN/APS-133(V)3	10.0	10.2	34.0	N/A
KC-130 HERCULES	AN/APN-241	10.0	3.9	13.0	N/A
E-2C HAWKEYE	AN/APS-145	1.4	57.6	189.0	None
E-6A MERCURY	AN/APS-133(V)	10.0	10.2	34.0	N/A
F-14 (ALL MODELS)	AN/AWG-9 OR AN/APG-71	10.0	SEE PAGE 2-36	N/A	N/A
F/A-18 (ALL MODELS)	AN/APG-65 OR AN/APG-73	10.0	40.8	134.0	N/A
P-3C ORION	AN/APG-66	10.0	12.7	42.0	N/A
P-3C ORION	AN/APS-115B	10.0	18.8	62.0	N/A
P-3C ORION	AN/APS-137B(V)5	10.0	33.7	111.0	N/A
S-3B VIKING	AN/APS-137A(V)1	10.0	33.5	110.0	None
SH-60B SEAHAWK	AN/APS-124	10.0	17.4	57.0	None
T-39N SABERLINER	AN/APG-66N	10.0	12.7	42.0	N/A
UC-12B HURON	COLLINS WXR-270	10.0	3.3	11.0	N/A
UC-35 CITATION	PRIMUS 650	10.0	1.2	4.0	N/A
V-22 OSPREY	AN/APQ-174B	10.0	7.1	23.0	N/A

†During ground radar operation, personnel shall remain outside the area defined by the HERP safe separation distances and antenna scan angles depicted in figure 2-2.

‡See paragraph D-6 for a discussion of rotating beam hazards.

Table 2-6. Aircraft Radiation Patterns

AIRCRAFT	PAGE
A/V-8B HARRIER	2-25
C-2 GREYHOUND	2-26
C-9B SKYTRAIN	2-27
C-20 GULFSTREAM IV	2-28
C-37 GULFSTREAM V	2-29
C-40A CLIPPER (BOEING 737-700)	2-30
C-130 HERCULES	2-31
KC-130 HERCULES	2-32
E-2C HAWKEYE	2-33
E-6A MERCURY (TACAMO)	2-34
EA-6B PROWLER	2-35
F-14 (ALL MODELS)	2-36
F/A-18 (ALL MODELS)	2-37
P-3C ORION	2-38
P-3C ORION	2-39
P-3C ORION	2-40
S-3B VIKING	2-41
SH-60B SEAHAWK	2-42
T-39N SABERLINER	2-43
UC-12B HURON	2-44
UC-35 CITATION	2-45
V-22 OSPREY	2-46

Aircraft		
A/V-8B HARRIER		
Radars	**HERP SAFE Separation Distance**	**ANTENNA SCAN ANGLE**
AN/APG-65	40.8 METERS/134.0 FEET	±70º

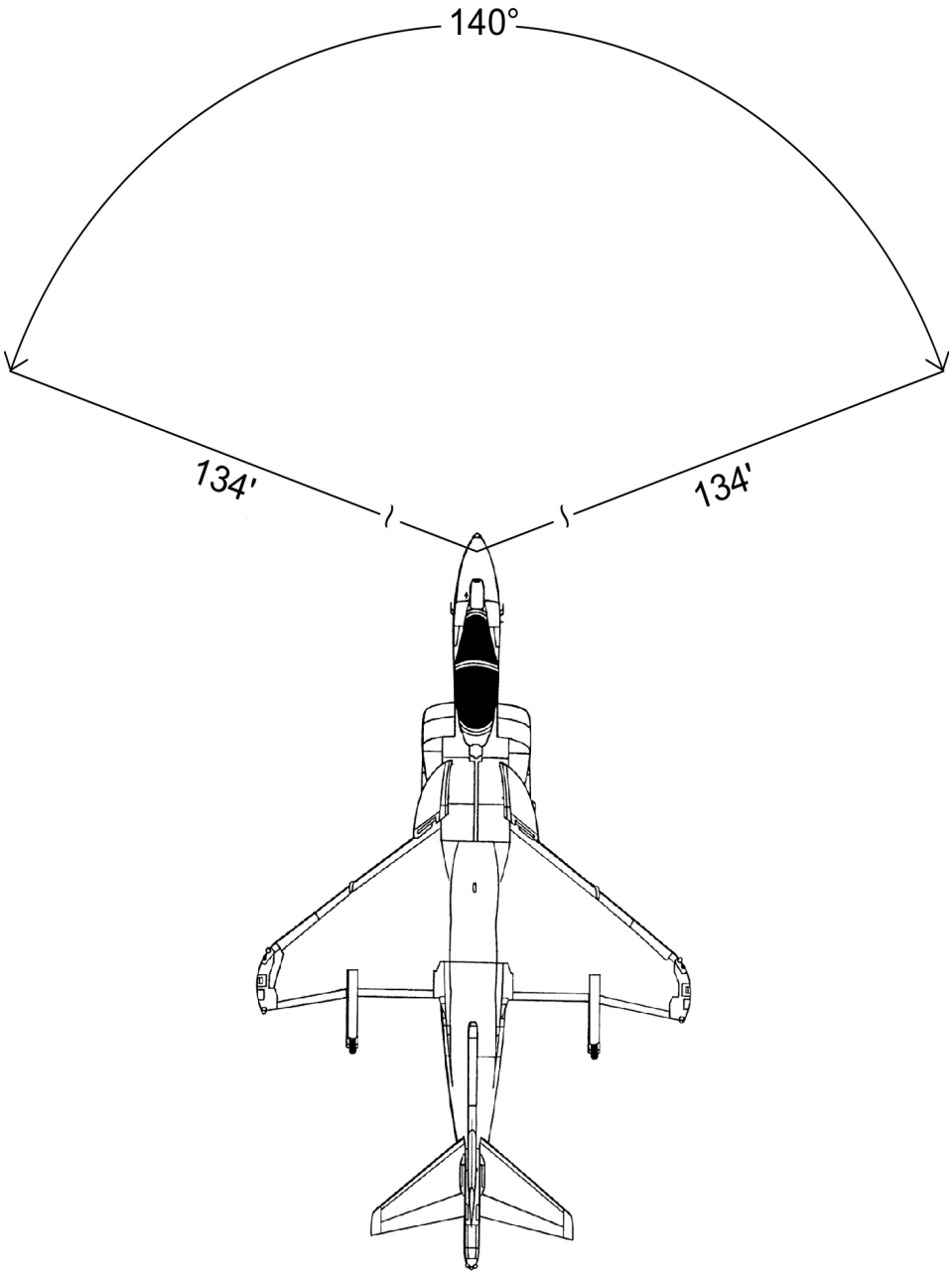

FIGURE 2-2. Aircraft Radiation Patterns

Aircraft		
C-2 GRAYHOUND		
Radars	**HERP SAFE Separation Distance**	**ANTENNA SCAN ANGLE**
HONEYWELL PRIMUS 870	1.2 METERS/4.0 FEET	60º

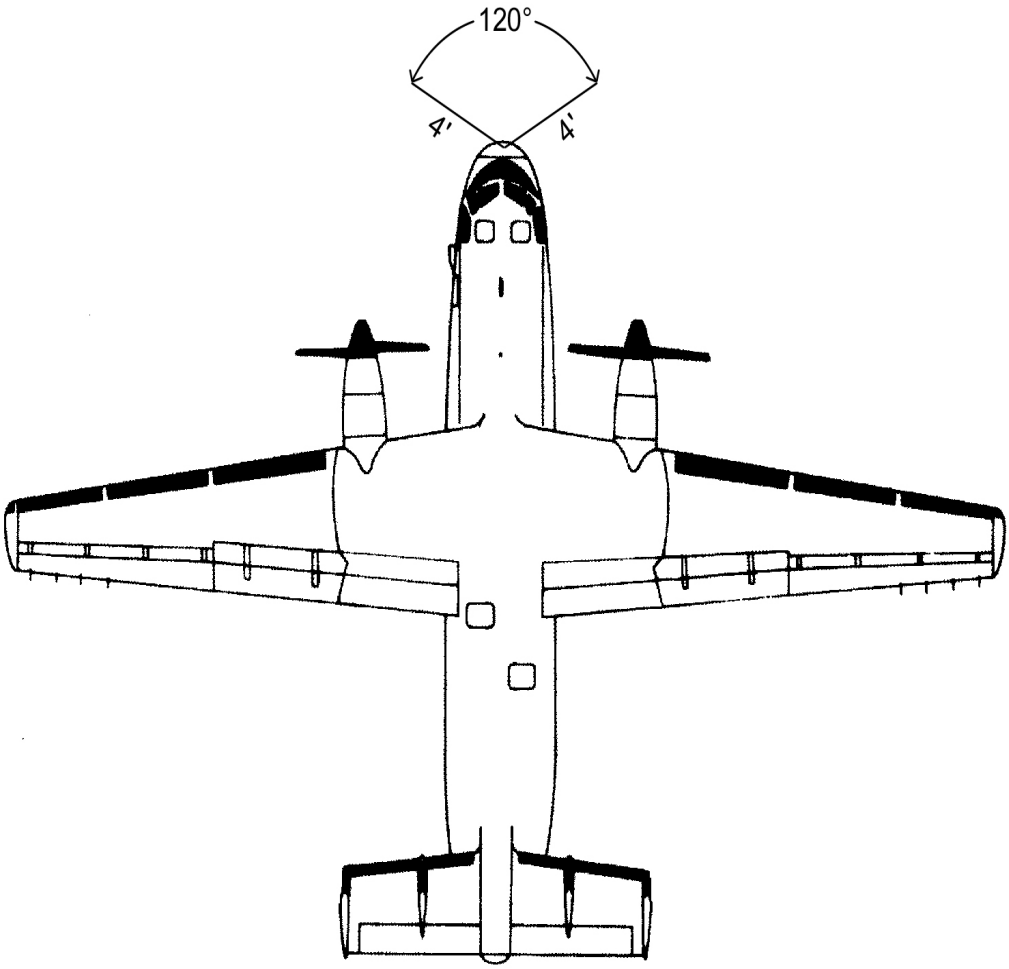

FIGURE 2-2. Aircraft Radiation Patterns (Continued)

Aircraft		
C-9B SKYTRAIN		
Radars	**HERP SAFE Separation Distance**	**ANTENNA SCAN ANGLE**
BENDIX/KING RDR-1E	12.8 METERS/42.0 FEET	±90º

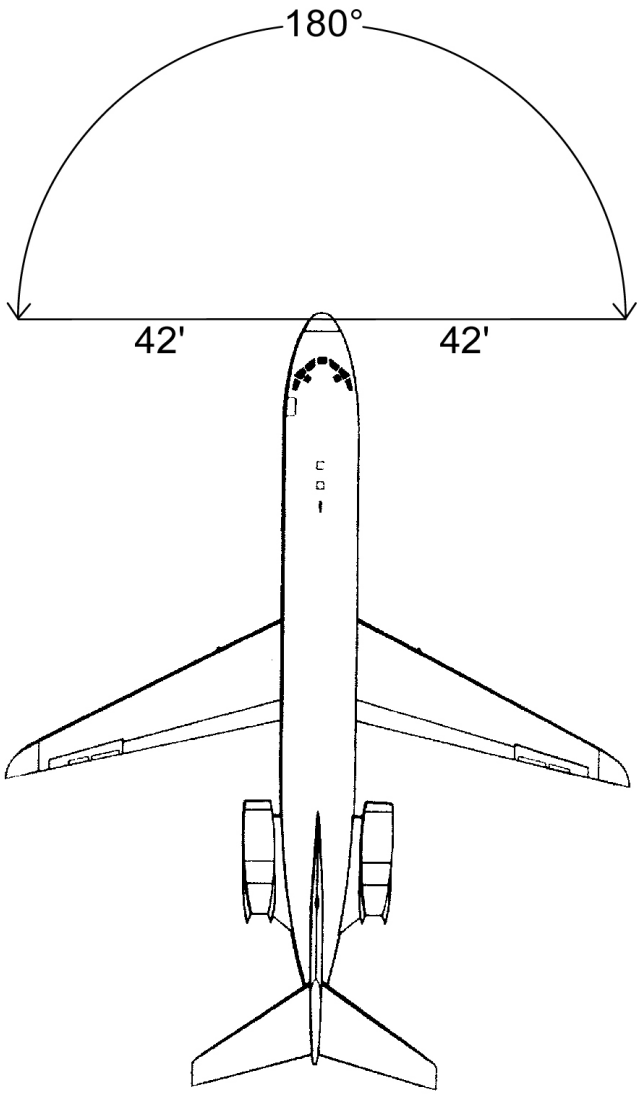

FIGURE 2-2. Aircraft Radiation Patterns (Continued)

Aircraft		
C-20 GULFSTREAM IV		
Radars	**HERP SAFE Separation Distance**	**ANTENNA SCAN ANGLE**
HONEYWELL PRIMUS 870	1.2 METERS/4.0 FEET	60º

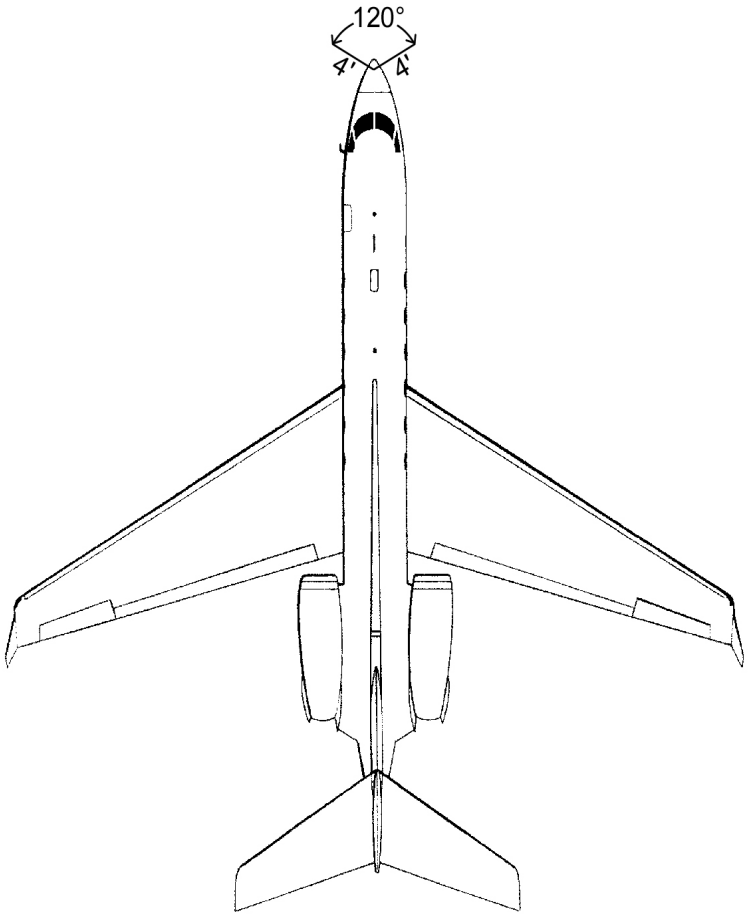

FIGURE 2-2. Aircraft Radiation Patterns (Continued)

Aircraft		
C-37 GULFSTREAM V		
Radars	**HERP SAFE Separation Distance**	**ANTENNA SCAN ANGLE**
HONEYWELL PRIMUS 880	3.1 METERS/10.0 FEET	60º

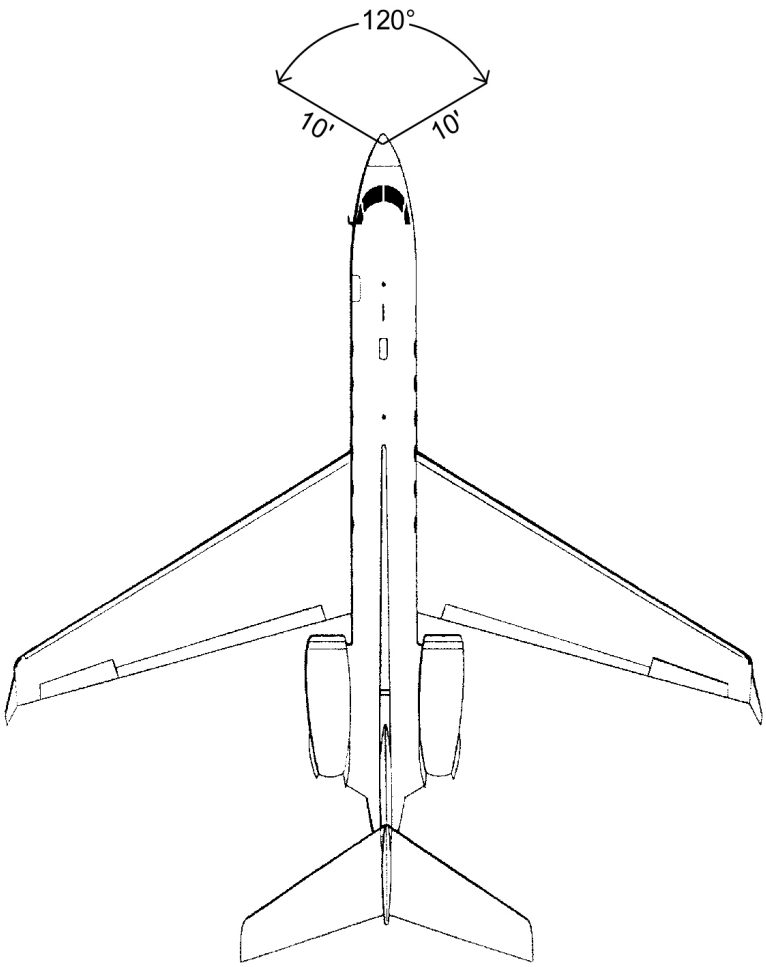

FIGURE 2-2. Aircraft Radiation Patterns (Continued)

Aircraft		
C-40A CLIPPER (BOEING 737-700)		
Radars	**HERP SAFE Separation Distance**	**ANTENNA SCAN ANGLE**
RAYTHEON WXR-2100	14.8 METERS/49.0 FEET	±70º

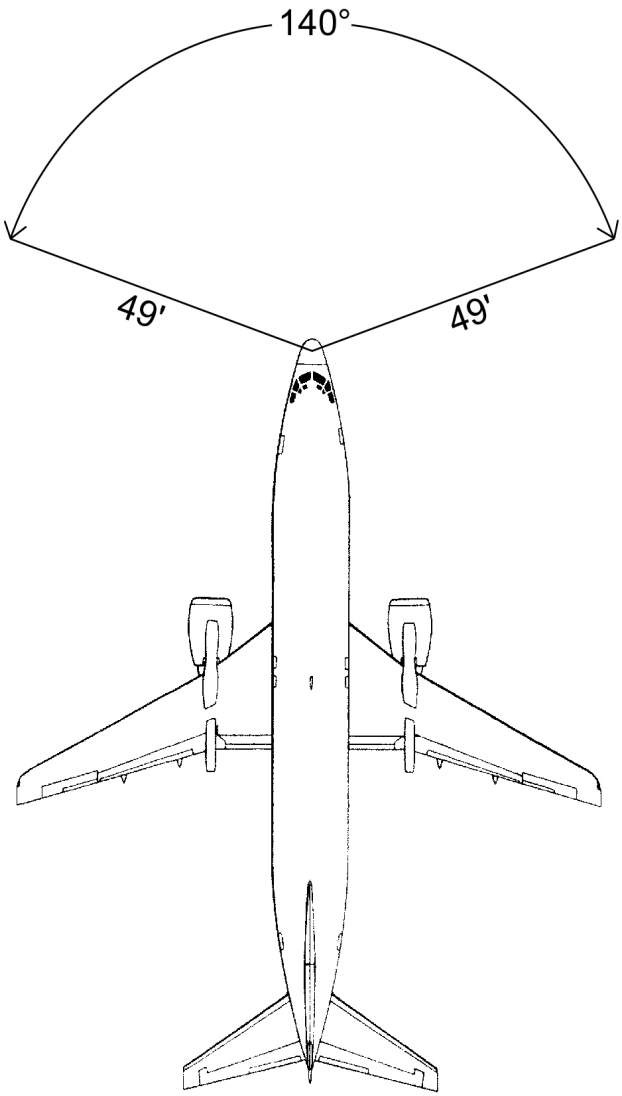

FIGURE 2-2. Aircraft Radiation Patterns (Continued)

Aircraft		
C-130 HERCULES		
Radars	**HERP SAFE Separation Distance**	**ANTENNA SCAN ANGLE**
AN/APS-133(V)3	10.2 METERS/34.0 FEET	90º

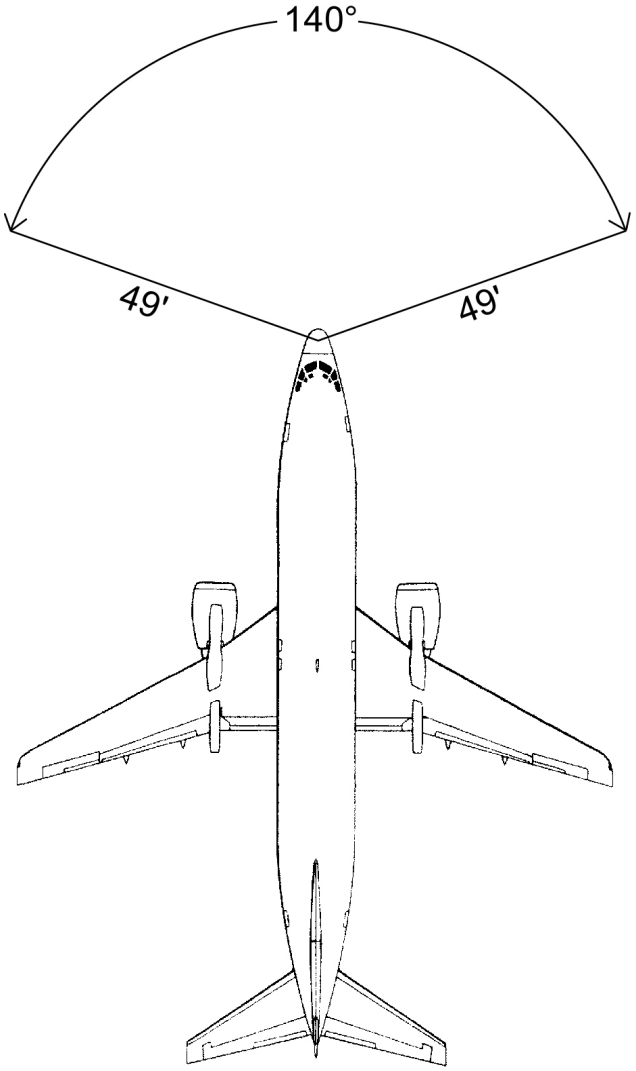

FIGURE 2-2. Aircraft Radiation Patterns (Continued)

Aircraft		
KC-130 HERCULES		
Radars	**HERP SAFE Separation Distance**	**ANTENNA SCAN ANGLE**
AN/APN-241	3.9 METERS/13.0 FEET	135º

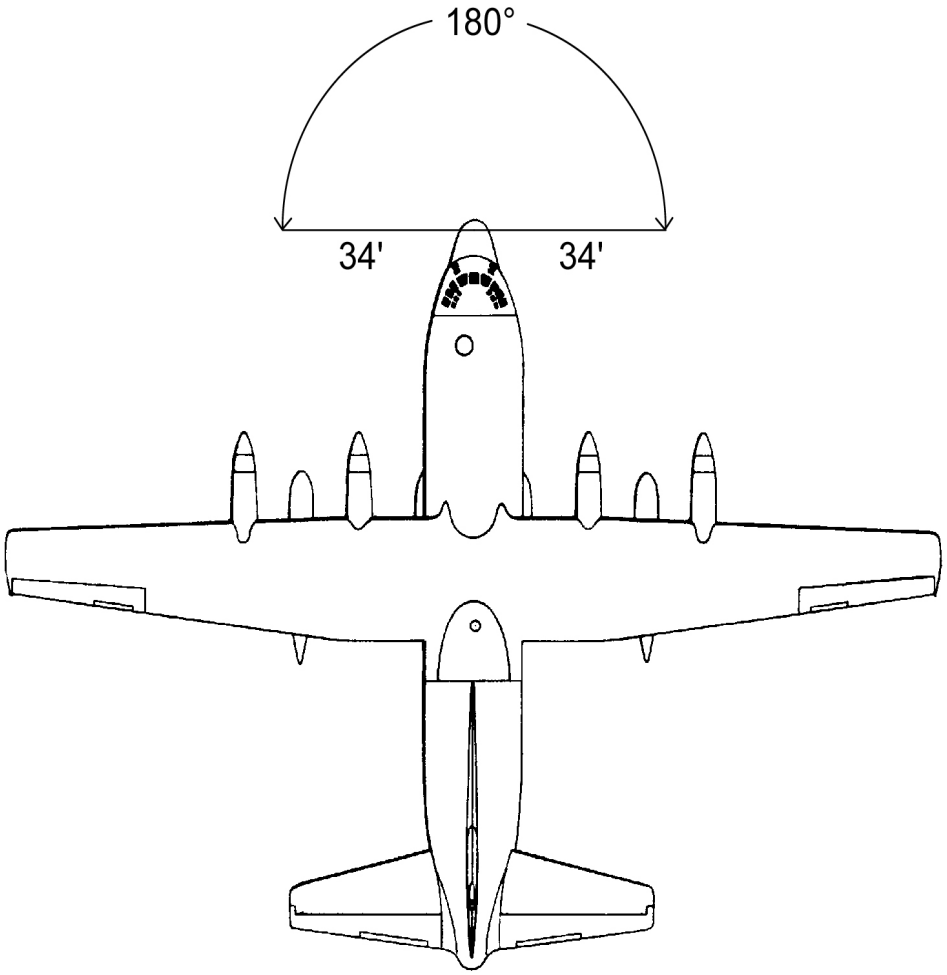

FIGURE 2-2. Aircraft Radiation Patterns (Continued)

Aircraft		
E-2C HAWKEYE		
Radars	**HERP SAFE Separation Distance**	**ANTENNA SCAN ANGLE**
AN/APS-145	57.6 METERS/189.0 FEET	360º

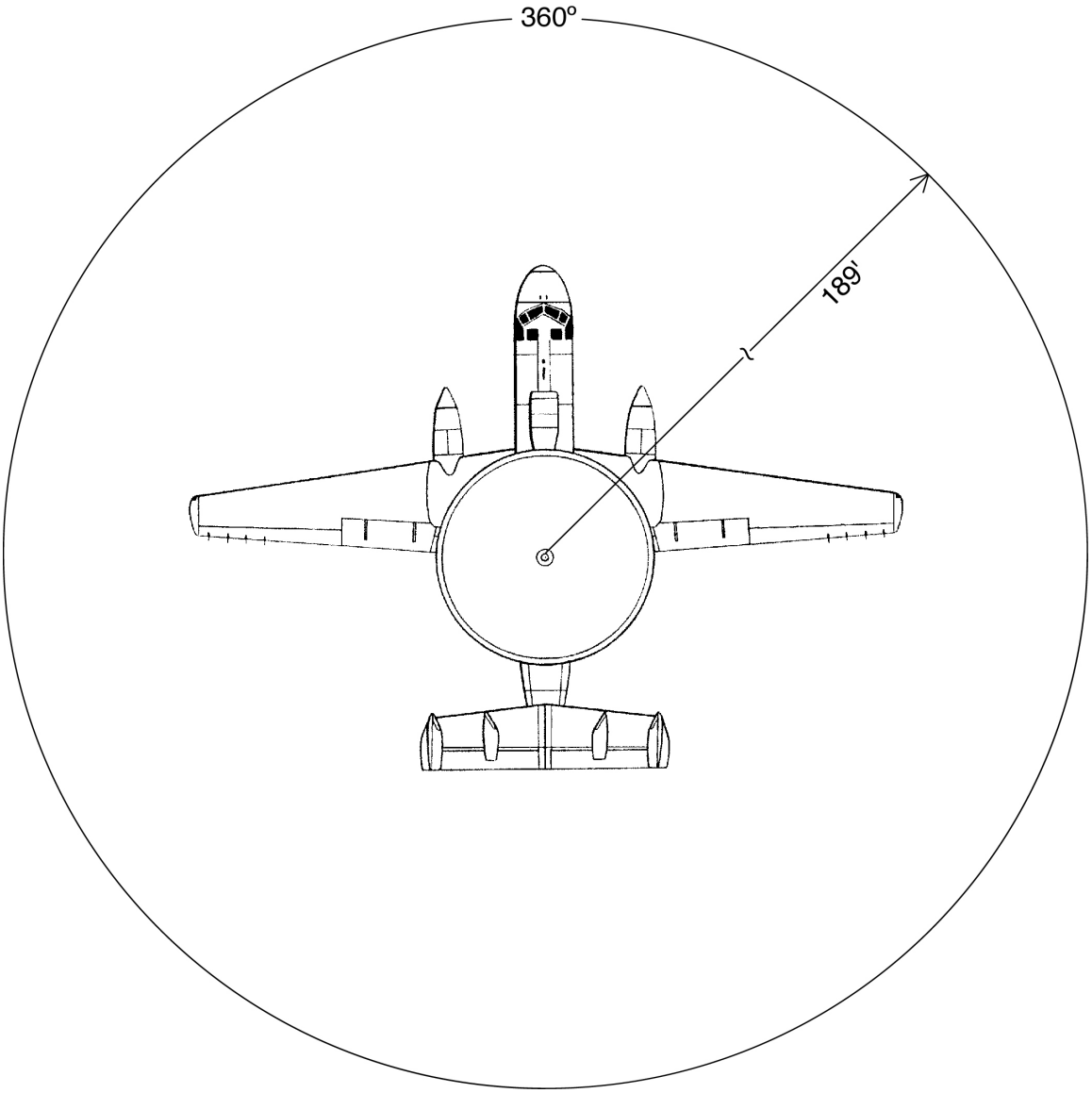

FIGURE 2-2. Aircraft Radiation Patterns (Continued)

Aircraft		
E-6A MERCURY (TACAMO)		
Radars	**HERP SAFE Separation Distance**	**ANTENNA SCAN ANGLE**
AN/APS-133(V)	10.2 METERS/34.0 FEET	±90º

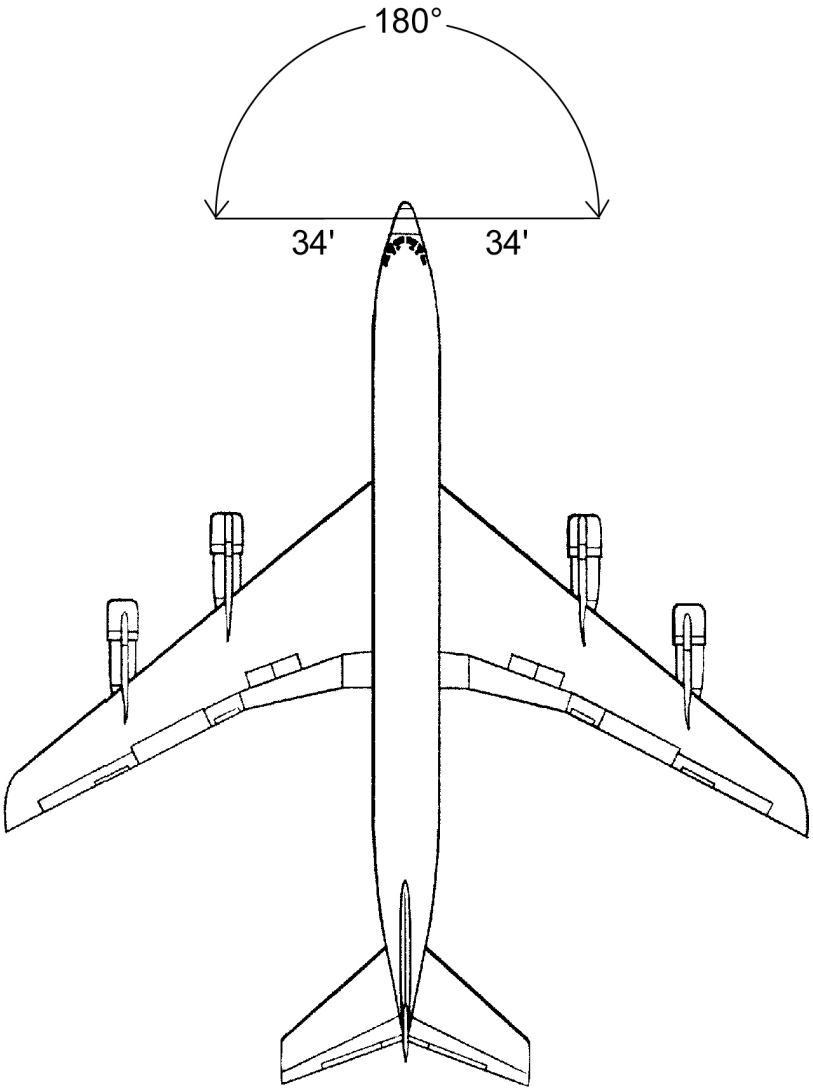

FIGURE 2-2. Aircraft Radiation Patterns (Continued)

Aircraft		
EA-6B PROWLER		
Radars	**HERP SAFE Separation Distance**	**ANTENNA SCAN ANGLE**
AN/APS-130B(V)1	7.0 METERS/23.0 FEET	±57º

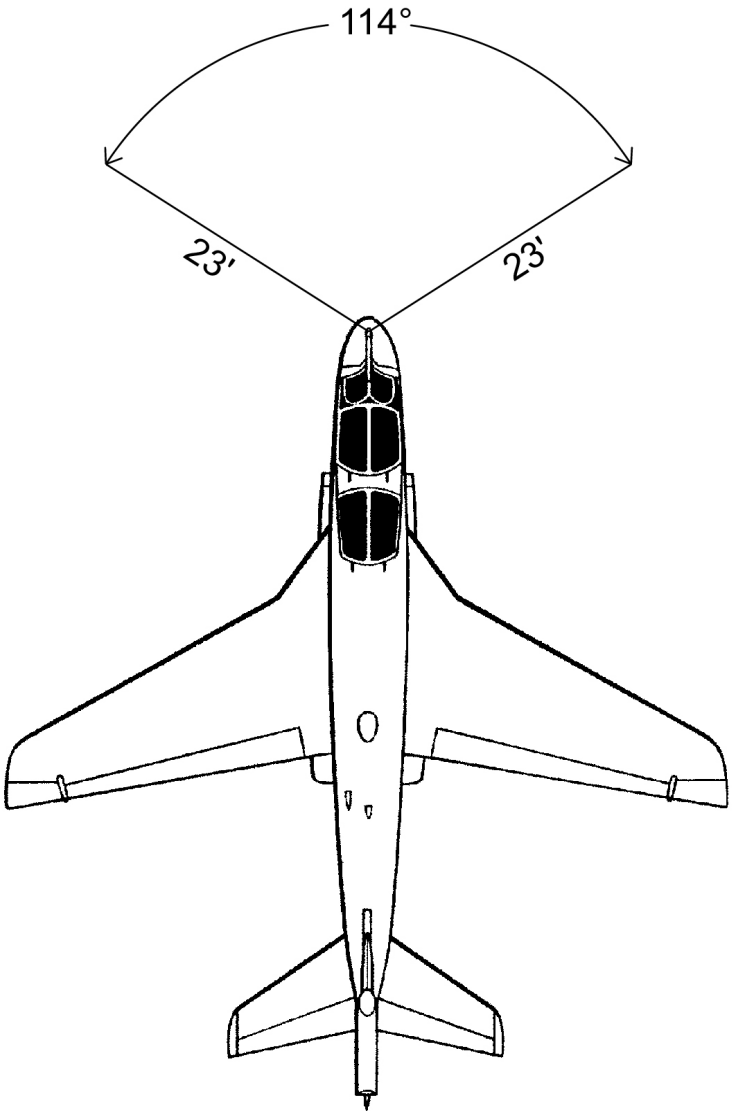

FIGURE 2-2. Aircraft Radiation Patterns (Continued)

Aircraft		
F-14 (ALL MODELS)		
Radars	**HERP SAFE Separation Distance**	**ANTENNA SCAN ANGLE**
AN/AWG-9 OR AN/APG-71	187.8 METERS/616.0 FEET	AS SHOWN

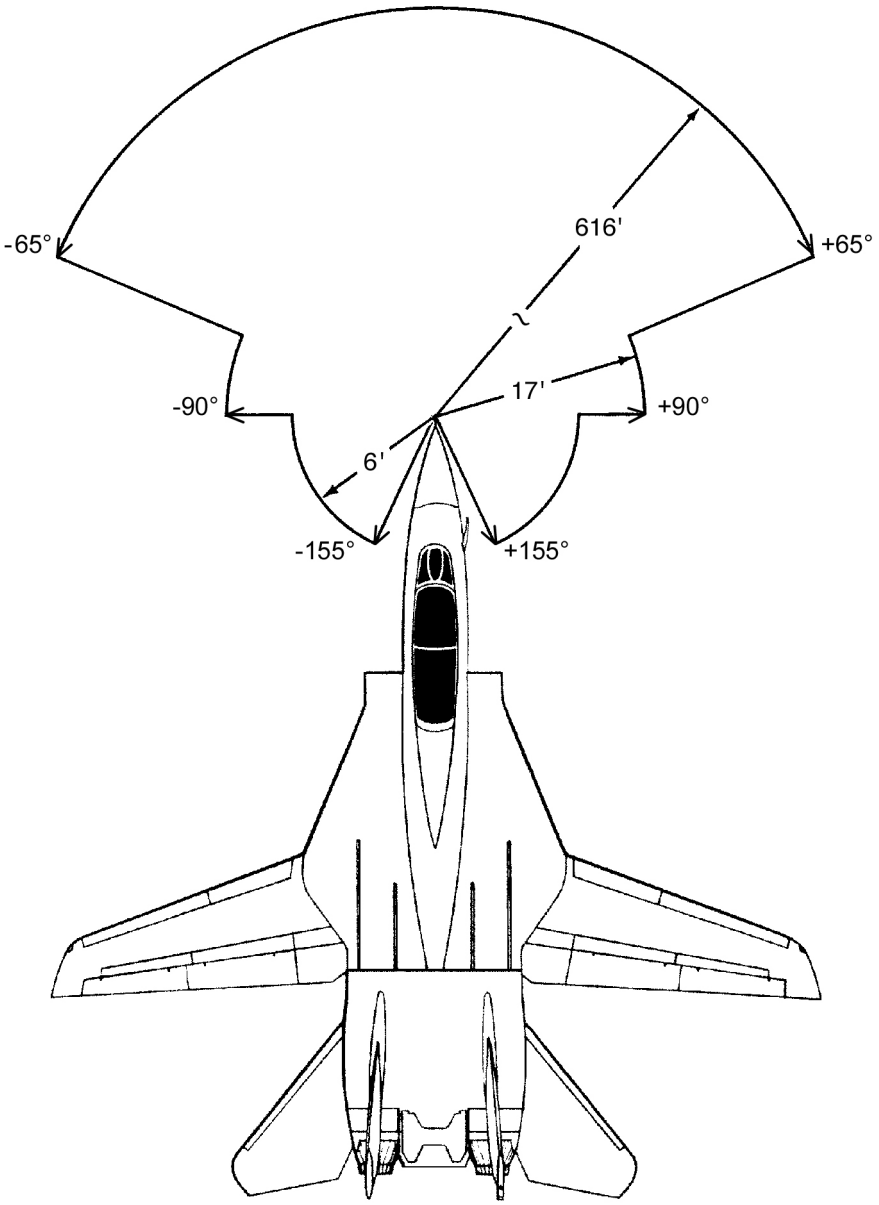

FIGURE 2-2. Aircraft Radiation Patterns (Continued)

Aircraft		
F/A-18 (ALL MODELS)		
Radars	**HERP SAFE Separation Distance**	**ANTENNA SCAN ANGLE**
AN/APG-65 OR AN/APG-73	40.8 METERS/134.0 FEET	±70º

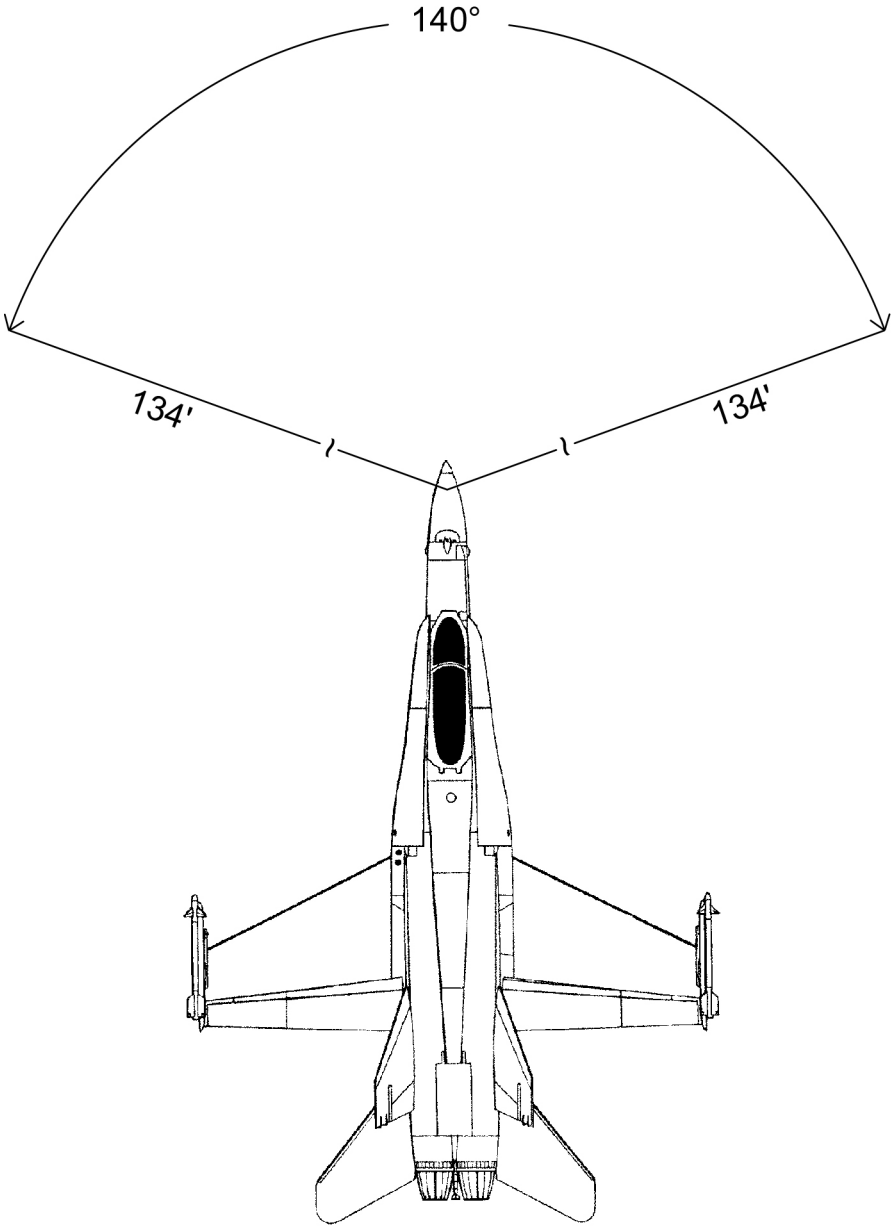

FIGURE 2-2. Aircraft Radiation Patterns (Continued)

Aircraft		
P-3C ORION		
Radars	**HERP SAFE Separation Distance**	**ANTENNA SCAN ANGLE**
AN/APG-66	12.7 METERS/42.0 FEET	±90º (NOSE AND TAIL)

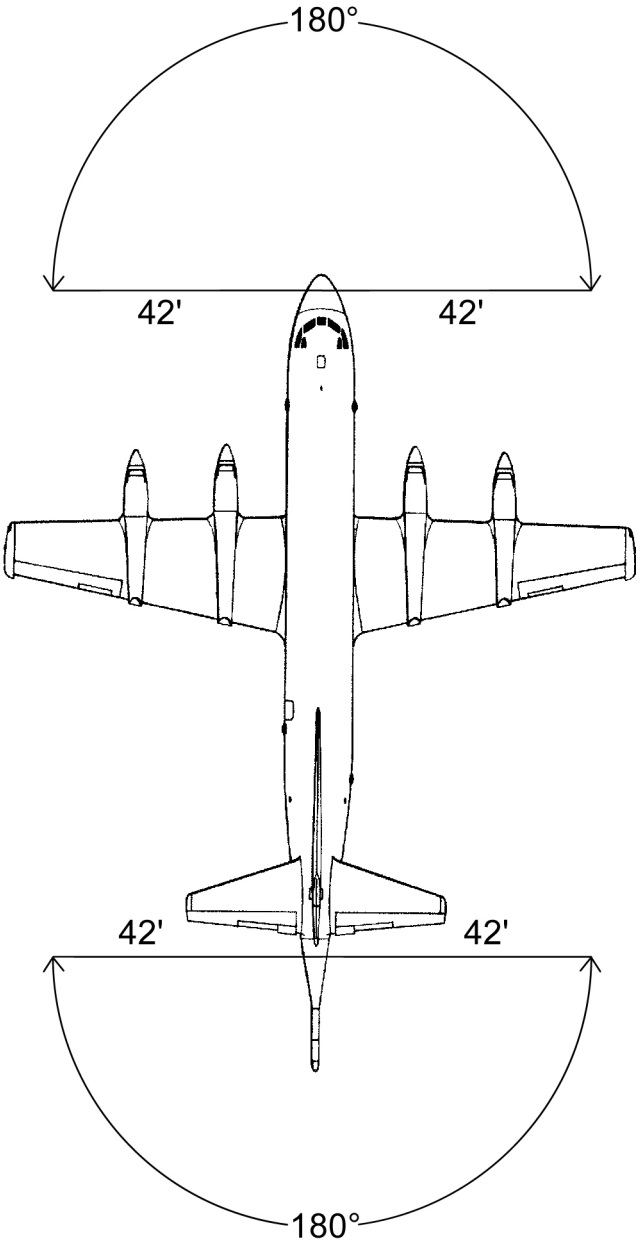

FIGURE 2-2. Aircraft Radiation Patterns (Continued)

Aircraft		
P-3C ORION		
Radars	**HERP SAFE Separation Distance**	**ANTENNA SCAN ANGLE**
AN/APS-115B	18.8 METERS/62.0 FEET	±90º (NOSE AND TAIL)

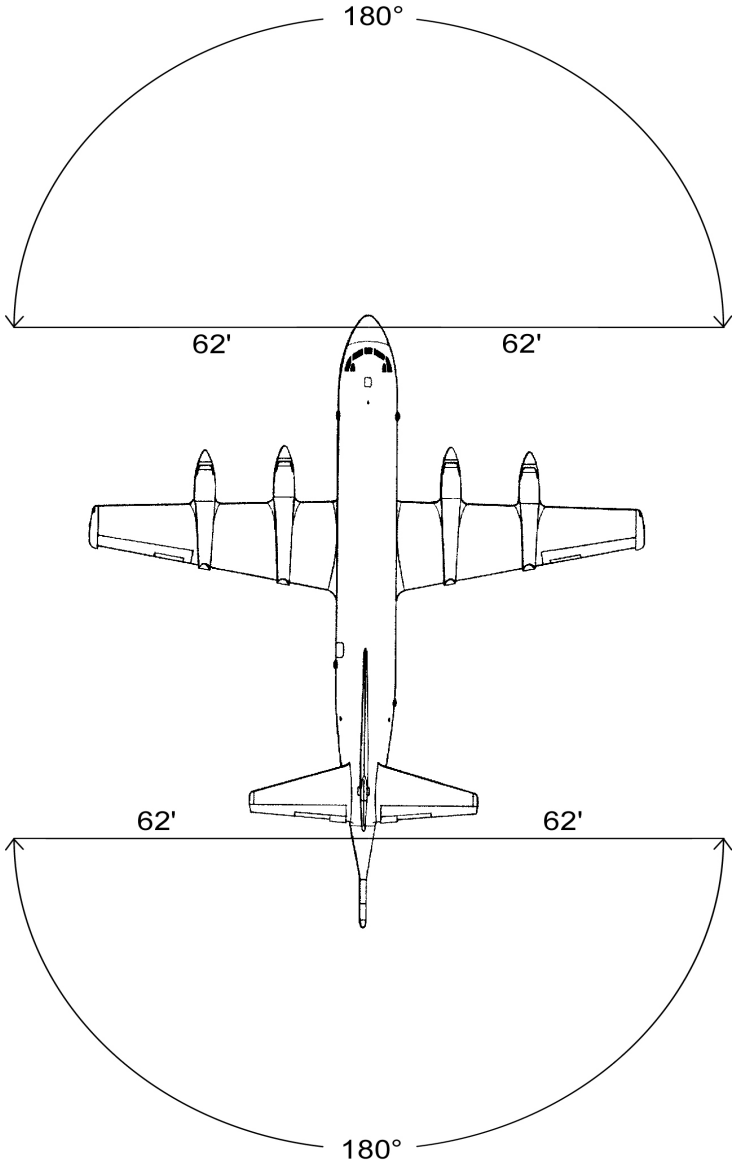

FIGURE 2-2. Aircraft Radiation Patterns (Continued)

Aircraft		
P-3C ORION		
Radars	**HERP SAFE Separation Distance**	**ANTENNA SCAN ANGLE**
AN/APS-137B(V)5	33.7 METERS/111.0 FEET	±90º (NOSE AND TAIL)

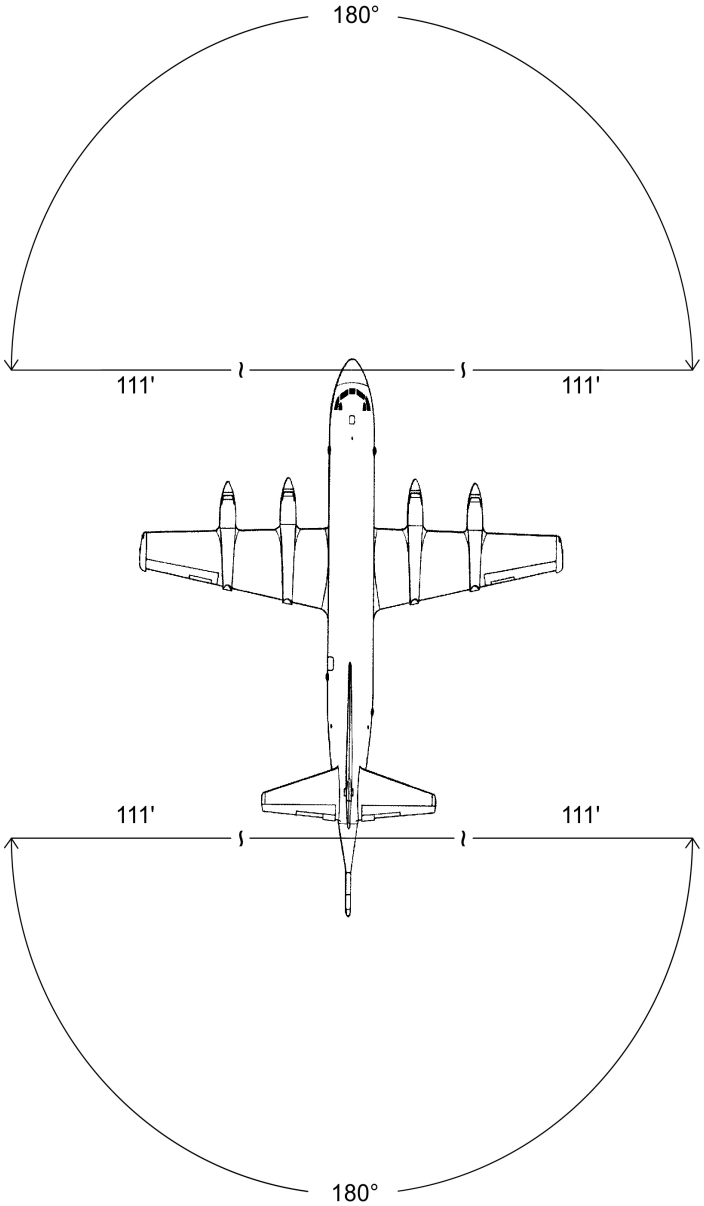

FIGURE 2-2. Aircraft Radiation Patterns (Continued)

Aircraft		
S-3B VIKING		
Radars	**HERP SAFE Separation Distance**	**ANTENNA SCAN ANGLE**
AN/APS-137A(V)1	33.5 METERS/110.0 FEET	360º

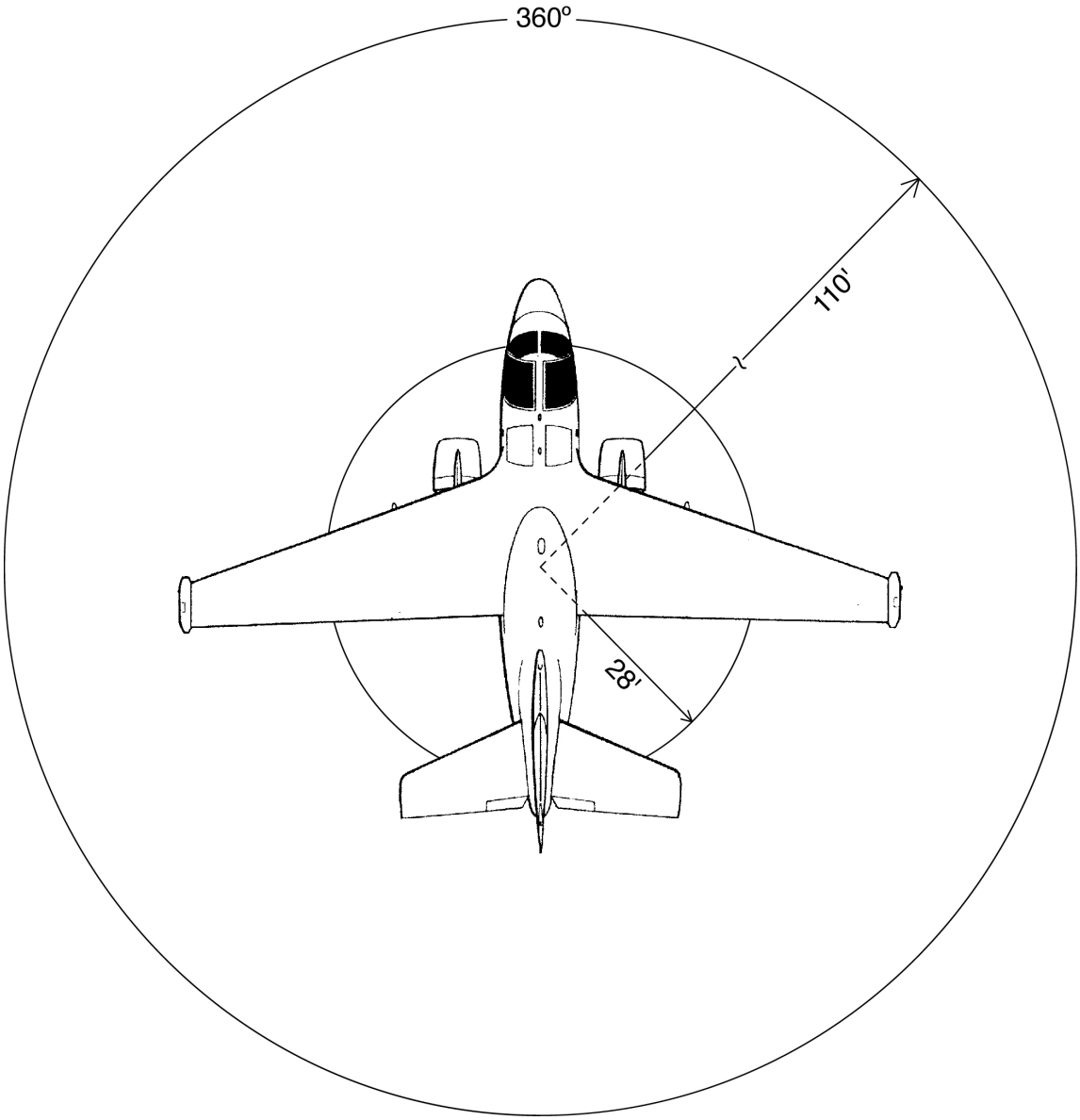

FIGURE 2-2. Aircraft Radiation Patterns (Continued)

Aircraft		
SH-60B SEAHAWK		
Radars	**HERP SAFE Separation Distance**	**ANTENNA SCAN ANGLE**
AN/APS-124	17.4 METERS/57.0 FEET	360º

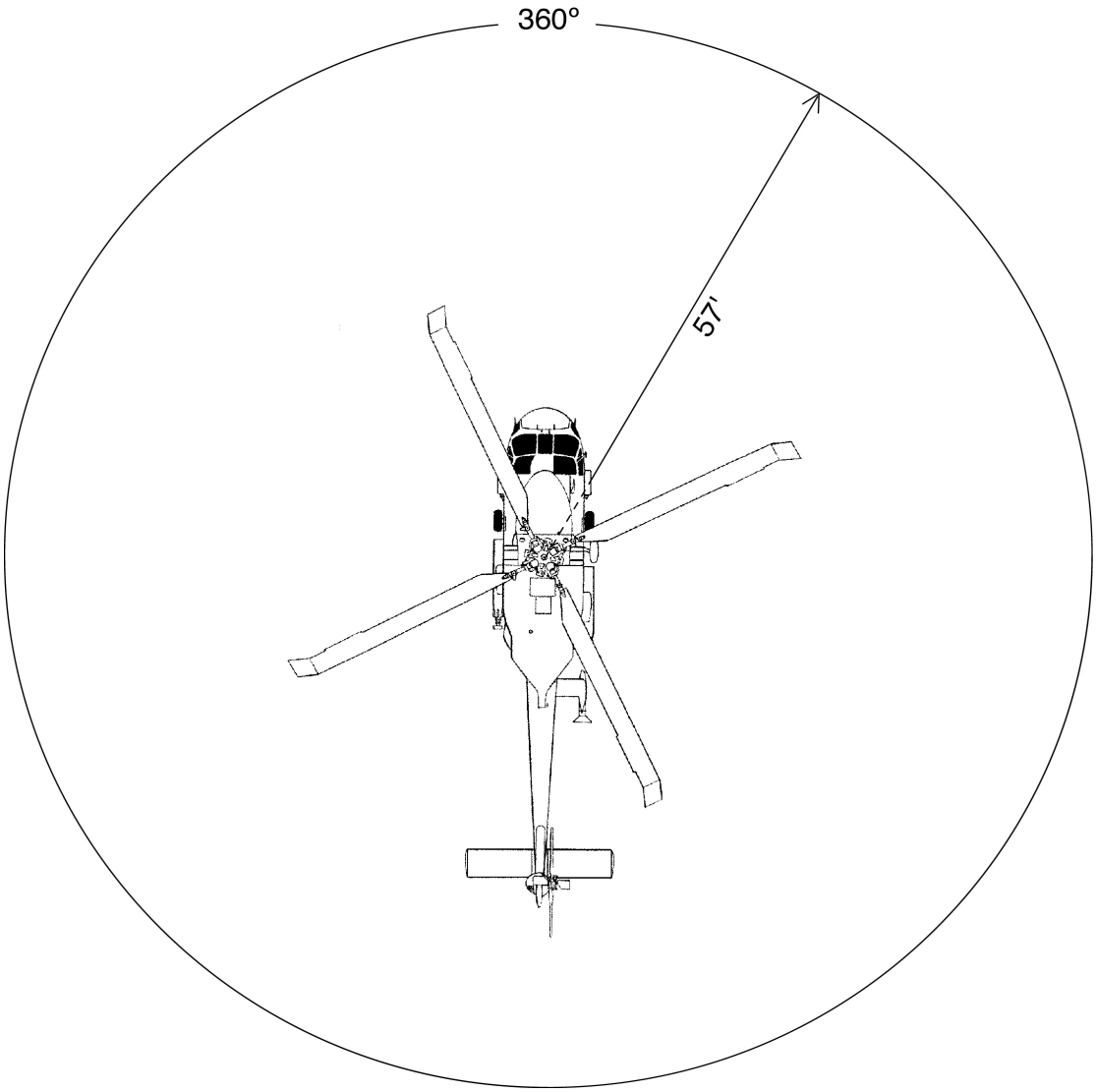

FIGURE 2-2. Aircraft Radiation Patterns (Continued)

Aircraft		
T-39N SABERLINER		
Radars	**HERP SAFE Separation Distance**	**ANTENNA SCAN ANGLE**
AN/APG-66N	12.7 METERS/42.0 FEET	±60º

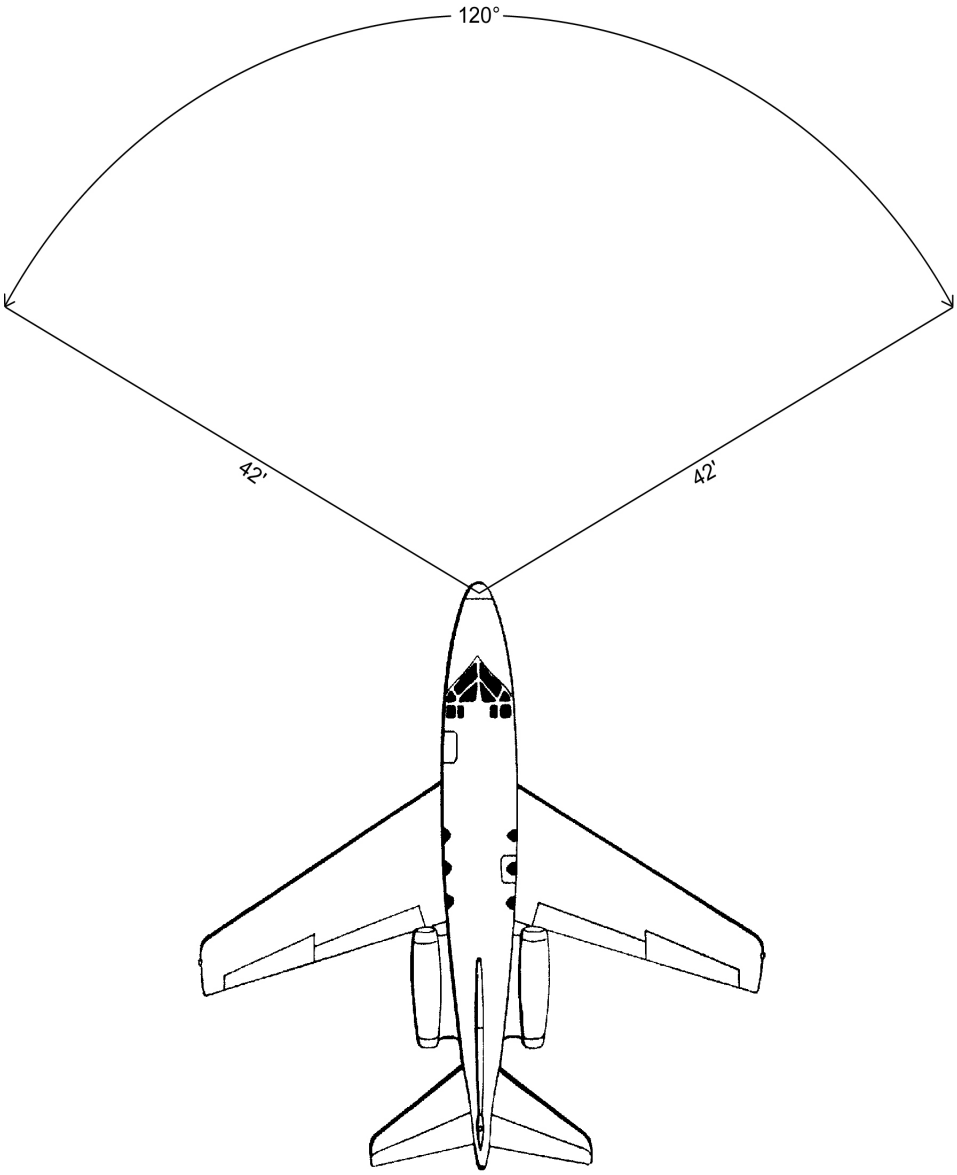

FIGURE 2-2. Aircraft Radiation Patterns (Continued)

Aircraft		
UC-12B HURON		
Radars	**HERP SAFE Separation Distance**	**ANTENNA SCAN ANGLE**
COLLINS WXR-270	3.3 METERS/11.0 FEET	±60º

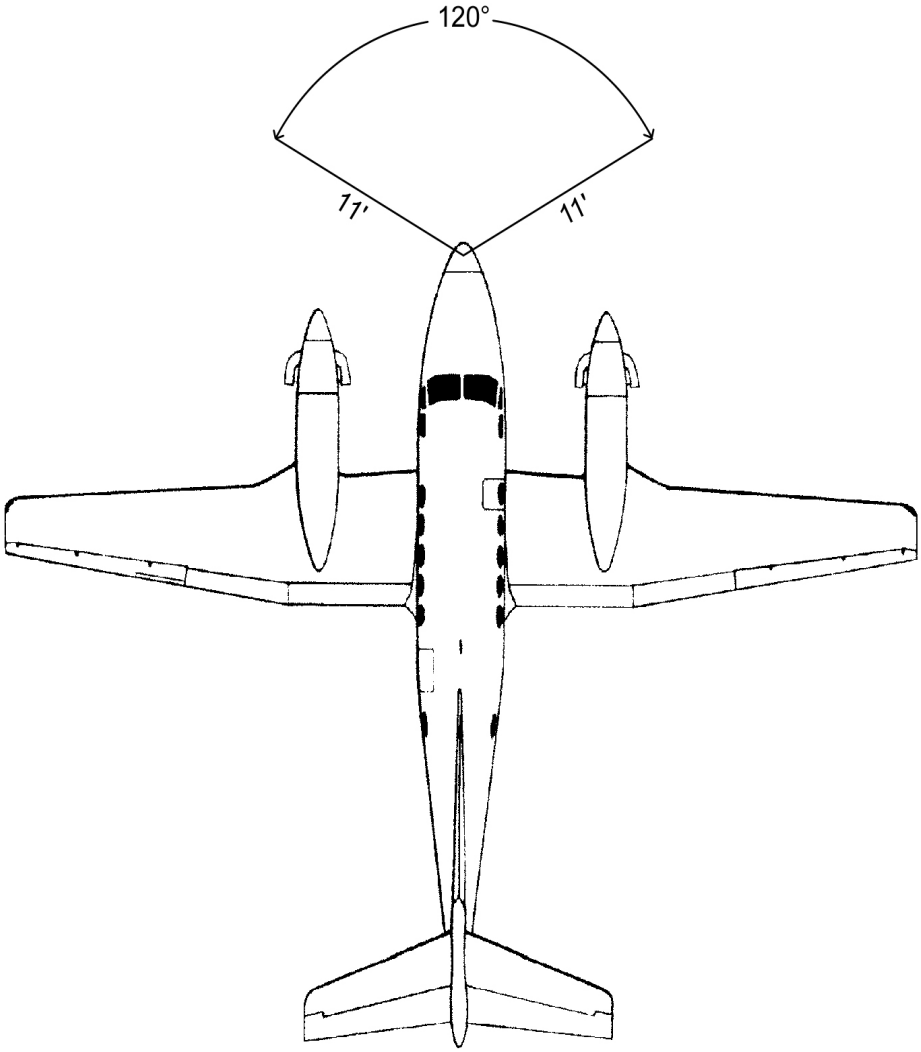

FIGURE 2-2. Aircraft Radiation Patterns (Continued)

Aircraft		
UC-35 CITATION		
Radars	**HERP SAFE Separation Distance**	**ANTENNA SCAN ANGLE**
HONEYWELL PRIMUS 650	1.2 METERS/4.0 FEET	±60º

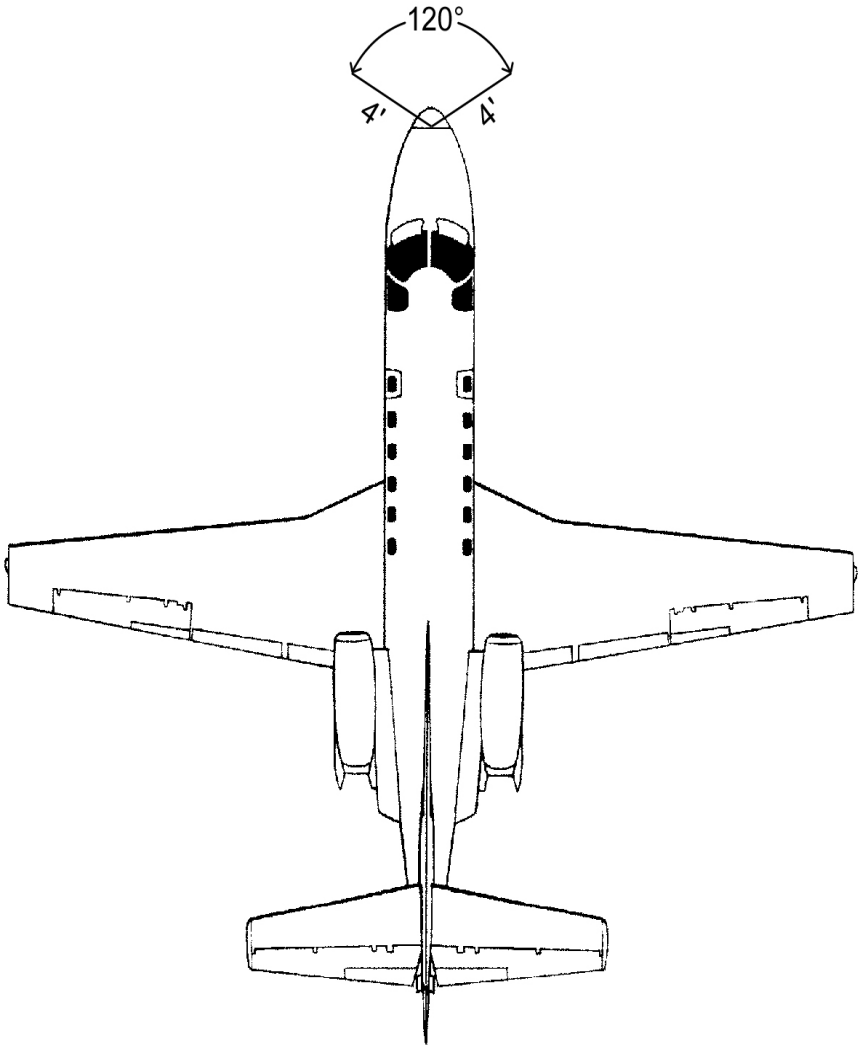

FIGURE 2-2. Aircraft Radiation Patterns (Continued)

Aircraft		
V-22 OSPREY		
Radars	**HERP SAFE Separation Distance**	**ANTENNA SCAN ANGLE**
AN/APQ-174B	7.1 METERS/23.0 FEET	±70º

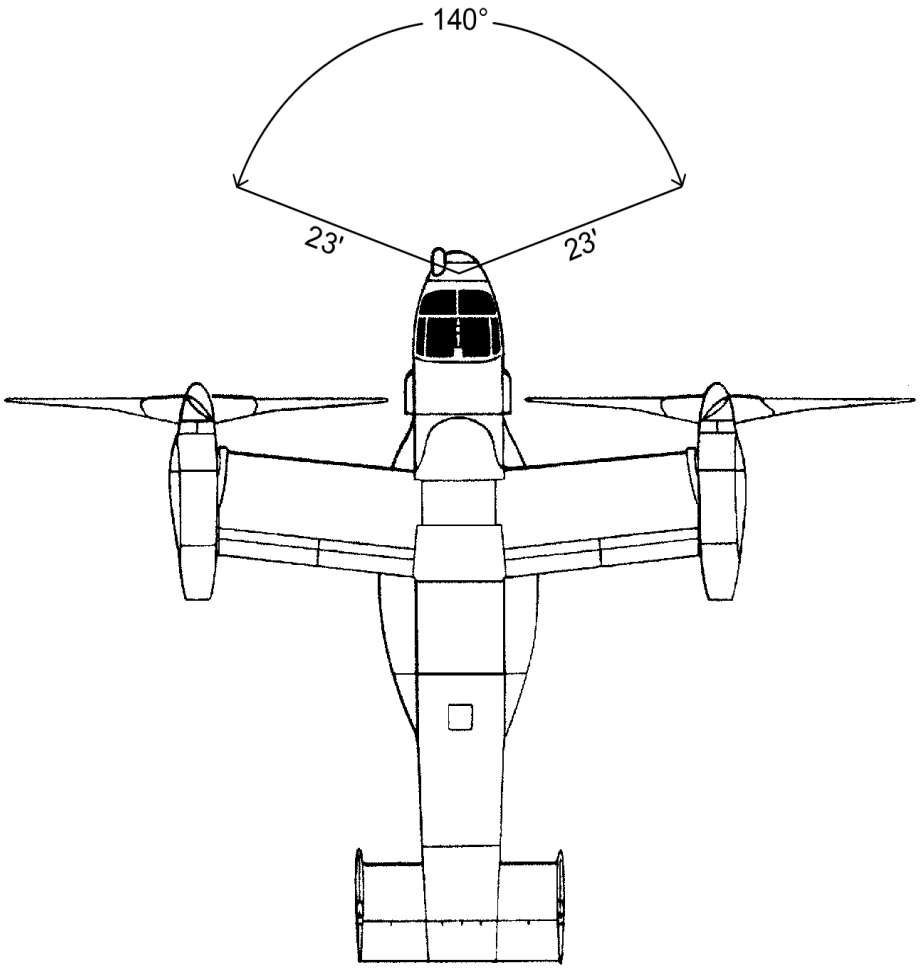

FIGURE 2-2. Aircraft Radiation Patterns (Continued)

CHAPTER 3

RF BURNS

3-1. SCOPE

This chapter discusses radio-frequency (RF) burns, why they can occur, and the procedures for minimizing RF burn hazards. An RF burn hazard will exist if there is a sufficiently high induced RF voltage on a metallic object to cause pain, visible skin damage, or involuntary reaction to a person who comes in contact with the object. The RF burn phenomenon is distinct from hazards of electromagnetic radiation to personnel and electrical shock.

3-2. RF BURNS FROM CARGO-HANDLING EQUIPMENT

3-2.1 GENERAL. The use of high-frequency (HF) transmitters (1 kW and up), and the complicated structure and rigging aboard ship, especially cargo ships, has increased the probability of voltages being induced on various objects. The handling of metallic cargo lines while shipboard HF transmitters are radiating can be hazardous to ship's personnel. On numerous occasions, RF voltages have been encountered on items such as crane hooks, running rigging, booms, missile launchers, and parked aircraft. These voltages, which may be sufficient to cause injury, are induced on the metallic items by radiation from nearby transmitting antennas.

3-2.2 RF BURN EFFECTS. An RF burn is the result of RF current flow through that portion of the body in direct contact with a conductive object (in which an RF voltage has been induced) or at the site of a spark discharge (no direct contact with a conductive object). Any burn injury that occurs is entirely the result of heat produced by current flow through the resistance of the skin. Current flow through a resistance produces heat regardless of the nature of the circuit. The effect of the heat on a person ranges from warmth to painful burns. The specific level at which contact with RF voltage should be classified as an RF burn hazard is not distinct. Hazardous, for the purpose of this section, is defined as the RF voltage that will cause a person pain or visible skin damage, or will cause an involuntary reaction. The term "hazard" does not include the lower voltages that cause annoyance, a stinging sensation, or moderate heating of the skin. Naval Sea Systems Command (NAVSEA), Code 53H, has established that an open-circuit RF voltage exceeding 140 volts on an item in an RF radiation field is to be considered hazardous. However, field tests have shown that, because of the many variables involved, it is not uncommon to encounter significantly higher voltages that do not result in a burn problem.

3-2.3 ELECTRICAL CHARACTERISTICS OF METALLIC OBJECTS.

3-2.3.1 All metallic items, regardless of intended use, have electrical properties of resistance, inductance, and capacitance. These properties depend upon the material, the size and shape of the objects, and the proximity of the objects to each other. The effect of the inductance and capacitance is frequency dependent. A configuration of metallic objects can be represented by

an approximately equivalent electrical circuit such as that illustrated by figure 3-1, a typical example of cargo-handling equipment. Potentially harmful voltages (current) may be generated when radiated electromagnetic energy couples to such equipment. At radio frequencies, the reactive components are the significant ones, and maximum voltage will be developed at a frequency and location where the inductive (L) and capacitance (C) reactances are equal; i.e., where there is a resonant circuit. This behavior is characteristic of an antenna.

3-2.3.2 Metallic objects having the physical and electrical characteristics of an antenna are commonplace aboard ships. Long lengths of metallic lines are particularly efficient interceptors of RF energy. The amplitude of the induced RF voltage depends on:

a. The length of the line with respect to the wavelength of the exciting RF field.

b. The nearness of the line to a radiating antenna.

c. The power being radiated by the transmitting antenna.

d. The orientation of the line with respect to the transmitting antenna.

Since most shipboard antennas transmit vertically polarized fields, voltages are more likely to be induced in vertical lines than in lines oriented in other directions.

3-2.3.3 As a practical matter, whether an induced voltage creates an RF burn hazard also depends upon whether personnel will come into contact with the object. Generally, only the voltage between an object and the deck is important.

3-2.3.4 Cargo ships, with their long lengths of metallic cables, are more likely to encounter the RF burn problem than other types of ships, although the problem is not limited to that type.

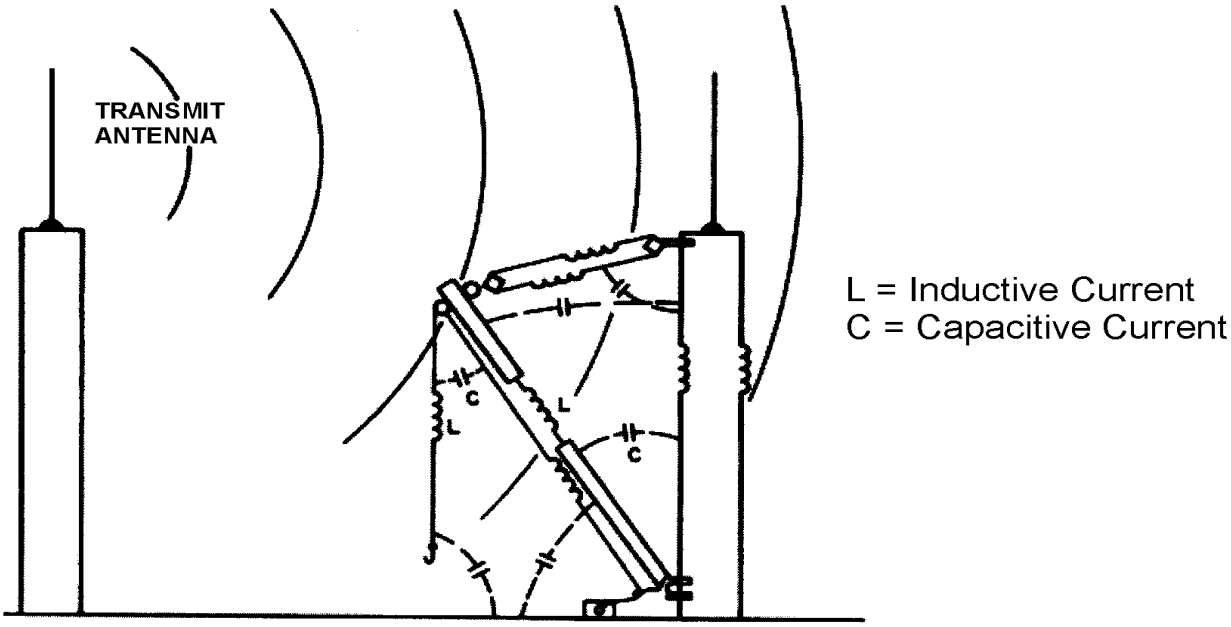

Figure 3-1. Electrical Equivalent of Cargo-Handling Equipment

3-2.3.5 When conditions conducive to RF burn hazards exist aboard ship, proper measurements are necessary to determine the extent of the hazard. Valid data from comprehensive tests will lead to recommendations to ensure maximum personnel safety with a minimum of operational limitations.

3-3. RF BURN HAZARD REDUCTION TECHNIQUES

3-3.1 INTRODUCTION. While there is no universally applicable method to completely eliminate RF burn hazards, there are several approaches to eliminating the problem in some cases or, in other cases, reducing it to manageable proportions. NAVSEA is continuing to search for methods to eliminate the hazard.

3-3.2 LIMITING BODY CONTACT CURRENT. As discussed in Department of Defense Instruction (DODINST) 6055.11, for frequencies between 100 kHz and 100 MHz, limiting body contact current to a maximum of 100 mA will significantly reduce the likelihood of RF burns. For frequencies between 3 kHz and 100 kHz, the contact current limit is frequency dependent.

3-3.3 HOOK INSULATORS. One method of eliminating the RF burn hazard on boom whip and downhaul hooks is to install an insulator link between the rigging and the hook. Tests have shown that these insulators are effective in the prevention of RF burns to the extent that contact with the hook itself will not injure anyone, but the RF voltage and potential burn hazard above the insulator remains unaffected. Unfortunately, numerous equipments involved in the RF burn problem are not amenable to the use of an insulating link.

3-3.4 NONMETALLIC MATERIALS. Another approach being pursued is the use of nonmetallic materials for applications where the RF burn hazard is a problem. Objects that can be made of nonconducting material will not be susceptible to induced voltages. At the present, though, there is no suitable nonmetallic substitute for the wire rope used on cargo equipment.

3-3.5 ANTENNA RELOCATION. Eliminating RF burn hazards by relocating antennas is often tempting but seldom practical. Because so many factors are involved in designing a shipboard antenna system, antenna relocation is not a feasible general solution to the RF burn hazard problem. Nevertheless, antenna relocation should not be abandoned as an impossibility.

3-3.6 OPERATIONAL PROCEDURES. In some cases, the RF burn hazard can be eliminated only through the use of restrictive operating procedures that govern the simultaneous use of transmitters and cargo equipments. These procedures incorporate the use of techniques such as operation of transmitters at reduced power and the prohibition of simultaneous use of certain combinations of antennas, frequencies, and cargo-handling equipments. The use of operational limitations will reduce the effectiveness of all equipments involved; therefore, these limitations must not be excessively restrictive. Effective operational procedures can be developed only after a shipboard RF burn survey has been conducted. Following this survey, specific operational procedures must be developed by persons who have a thorough knowledge of the operational requirements of the ship and have the authority to designate which operations and equipments have priority over others.

3-3.7 RF RADIATION HAZARD WARNING SIGNS. In cases where RF burn hazards cannot be eliminated, the probability of personnel coming in contact with hazardous voltages can be reduced through the use of RF radiation hazard warning signs, as discussed in paragraph 2-2.2. The locations for posting the signs should be chosen with care to ensure that they will pinpoint, as nearly as possible, the exact location of potential hazards. Indiscriminate and excessive use of the signs will reduce their effectiveness.

CHAPTER 4

BIOLOGICAL RADIATION HAZARD FROM LASER DEVICES

4-1. INTRODUCTION

4-1.1 The acronym "Laser" is derived from the initial letters of the words "Light Amplification by Stimulated Emission of Radiation." The term "optical maser" was used earlier because the original work was done with microwaves. Figure 4-1 illustrates the laser wavelength spectrum. The biological effects of laser radiation are similar to light generated by high-intensity, conventional ultraviolet (UV), infrared, and visible light sources such as the sun, nuclear explosions, or arc lamps. However, the chance of eye or skin damage is greater from laser radiation because the laser output is highly coherent (in phase), and the high intensity is localized into a very directional beam. When laser radiation is absorbed by the body or eyes, it is converted into heat which, in turn, causes redness, blistering, and, if intense enough, even charring of the skin or visual impairment, which may be permanent.

4-1.2 Developments in laser technology have resulted in an increase in the use of these devices for military applications, both for research and operational use. The widespread use of these systems increases the probability of personnel exposure to injurious intensities of laser radiation. Adequate safeguards are needed, since injury may occur at considerable distance. All equipment containing lasers, and all lasers produced after 2 August 1976, must comply with the Radiation Control for Health and Safety Act, Code of Federal Regulations (CFR) Title 21, Subchapter J, Part 1040, unless it has an exemption from the National Center for Devices and Radiological Health, Rockville, Maryland. The procedures for using lasers safely are contained in American National Standards Institute (ANSI) Z136.1. The following provides some of the essential safety requirements for use at Navy shore installations and aboard ships.

4-2. GENERAL PRECAUTIONS APPLICABLE TO ALL LASER INSTALLATIONS

4-2.1 For a summary of hazards and sample laser safety emission control (EMCON) bills, refer to Chief of Naval Operations Instruction (OPNAVINST) 5100.27/Marine Corps Order (MCO) 5104.1 (series), Navy Laser Hazards Control Program.

4-2.2 Unprotected personnel shall never be exposed to laser radiation in excess of the maximum permissible exposure (MPE) levels specified in ANSI Z136.1.

4-2.3 Direct viewing of laser beams, even during optical alignment, is prohibited when levels are greater than the MPE.

4-2.4 Optical viewing systems such as lenses, telescopes, etc., may increase the hazard to the eye.

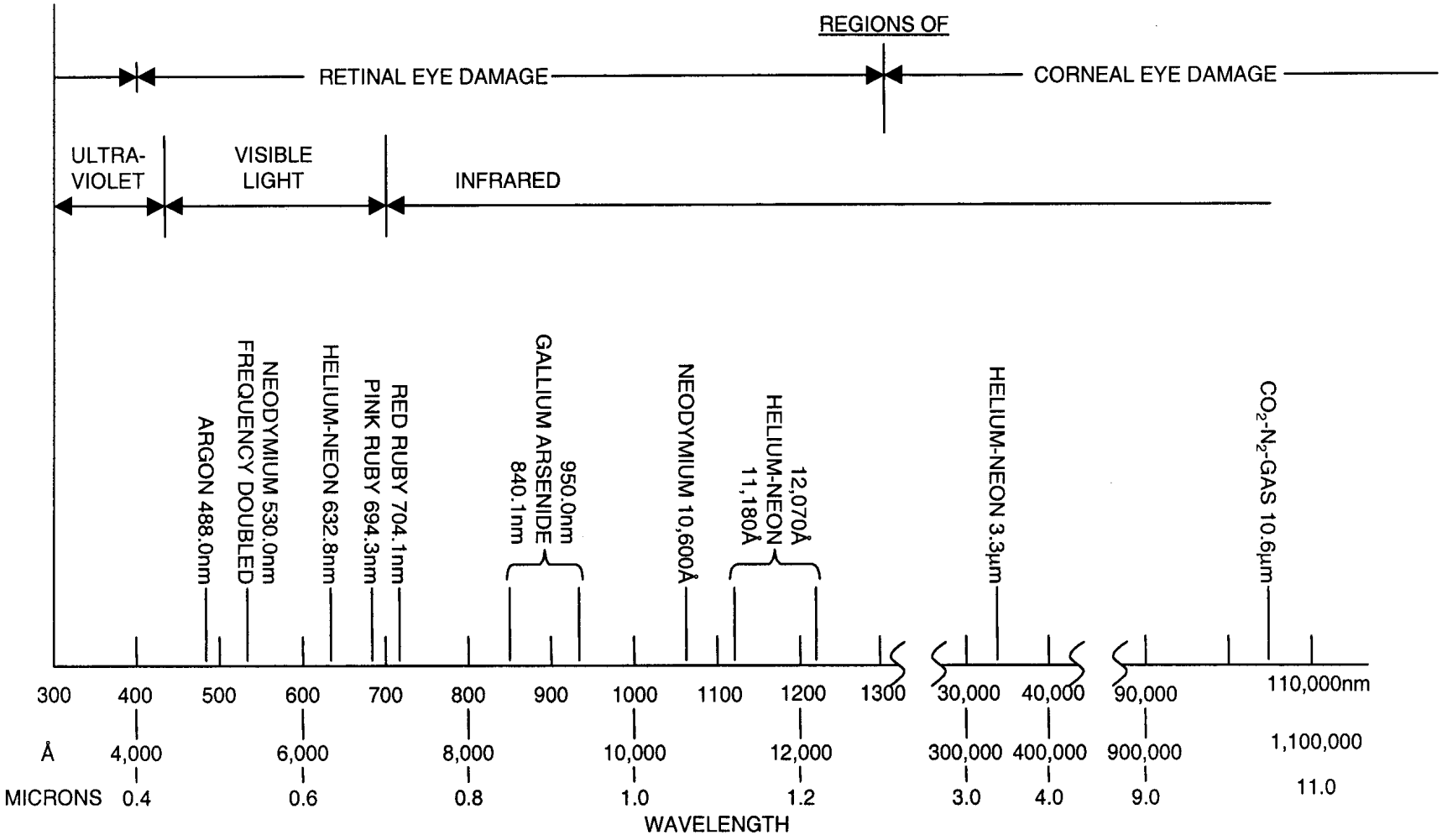

FIGURE 4-1. Laser Wavelength Chart

4-2.5 All involved personnel shall be trained to avoid looking directly at an operating laser or its reflection. Personnel protective equipment (laser eye protection), specifically designed and marked (with optical density and wavelength) for protection against radiation from the laser system in use, shall be used when engineering or procedural controls are inadequate to eliminate radiation levels in excess of the MPE.

4-2.6 Laser protective eyewear shall be marked with optical density values and wavelength for which protection is afforded, and shall be issued to involved personnel. The eyewear shall provide a snug fit. Periodic inspections of the goggles shall include:

a. Inspection of the attenuator material for pitting, crazing, cracking, etc.

b. Inspection of the goggle frame for mechanical integrity and leaks.

4-2.7 Only authorized personnel shall operate laser systems.

4-2.8 Spectators shall not be allowed access to the laser control area unless appropriate supervisory approval has been obtained and protective measures taken.

4-2.9 At least two people should be present at all times when lasers are in operation so that first aid may be rendered in the event of an injury and to prevent access by unauthorized personnel. Where the operation allows, a countdown procedure should be followed to minimize unnecessary exposure by donning laser eye protection and/or moving out of the path of the laser beam.

4-2.10 Reflecting surfaces such as mirrors, bottles, windows, and metal, or other surfaces which have a high coefficient for specular reflection, shall be eliminated from the beam path or shall be faced and/or surrounded with diffuse substances to absorb the energy.

4-2.11 Lasers and laser beams should be contained within a suitably controlled equipment or space so that noninvolved personnel in such an area cannot be accidentally injured. Laser beams emitted by an unenclosed system must be terminated at the end of the beam path if the exposure level is greater than the maximum allowable level. The backstop shall be of material that will absorb the particular wavelength. Special care in absorbing and containing the laser radiation must be taken, especially when the laser is emitting energy in the UV or infrared portions of the spectrum, because an observer might receive damage to the eyes without being aware of the reflection. Laser controls must be located to prevent operator exposure to unsafe levels of radiation.

4-2.12 Hazardous byproducts may result from the reaction of the laser radiation (especially UV laser radiation) with air and other substances (toxic/explosive gases, skin irritants, radio-frequency/UV/x-ray emissions, plasma).

4-2.13 The following are examples (sources) of hazards typically associated with laser operations:

a. High-voltage electrical hazards.

b. Use of cryogenics.

c. Compressed gases.

d. Carcinogenic material.

e. Noise.

f. Arc lamps, filament lamps, capacitors (explosion hazards).

g. Targets (which may shatter/explode).

h. Ionizing radiation.

i. Incoherent optical and UV radiation from laser discharge tubes or flash lamps.

Proper personnel protection and procedures shall be provided in the use of cryogenics. Compressed gas bottles shall be secured. All laser discharge tubes or flash lamps, the laser target, capacitors, and all elements of the optical train which may shatter shall be adequately contained. All voltages in excess of 30 volts shall be guarded. All incidental radiation shall be adequately shielded. The laser spaces shall be adequately ventilated to remove toxic gases. All toxic materials shall be so marked and adequately controlled. Smoking, eating, or drinking in laser beam areas should be prohibited.

4-3. LASER CLASSIFICATION AND LABELING

4-3.1 All lasers, other than military exempt lasers, must be classified and labeled by the manufacturers per CFR Title 21, Part 1040.10. Military exempt lasers are classified per ANSI Z136.1. This classification system is based on laser output parameters. There are four laser hazard classifications that determine the required extent of radiation safety controls. These range from class I lasers that are safe for direct beam viewing under most conditions, to class IV lasers that require the strictest controls. Laser product classification pertains to intended use only. When a laser product is disassembled for maintenance and protective features are removed, the laser classification may change to a more hazardous class. Details concerning laser classification are in CFR Title 21, Part 1040.10, and ANSI Z136.1. Controls for each class are addressed in OPNAVINST 5100.27/MCO 5104.1 (series) and its referenced instructions.

4-3.2 MILITARY EXEMPT LASERS. As per OPNAVINST 5100.27/MCO 5104.1 (series), the Navy Laser Safety Review Board (LSRB) must approve most class III and class IV lasers, and all military exempt lasers, prior to their use within the Department of the Navy. All lasers used for combat, combat training, or classified in the interest of national security are eligible for this exemption and, if so designated by the LSRB, are exempt from federal requirements applicable to commercial products. Military exempt lasers must be labeled as shown in figure 4-2 (or as specified by the LSRB) and, upon request, an inventory of a command's class III, class IV, and military exempt lasers shall be sent to the Bureau of Medicine and Surgery (MED 212) per OPNAVINST 5100.27/MCO 5104.1 (series).

CAUTION FOR MILITARY EXEMPT LASERS

This electronic product has been exempted from FDA radiation safety performance standards prescribed in the Code of Federal Regulations, Title 21, Chapter I, Sub-chapter J, pursuant to Exemption No. 76EL-01DOD issued on July 26, 1976. This product should not be used without adequate protective devices or procedures.

FIGURE 4-2. Military Laser Exemption Label

4-3.3 LASER RANGE AND BUILDING WARNING SIGNS. Warning signs, as specified in section 4.7 of ANSI Z136.1, shall be posted at the entrances to laser ranges and buildings in accordance with sections 4.3.9, 4.3.10, 4.3.11, and 4.3.12 of ANSI Z136.1.

4-3.4 For all invisible radiation (less than 400 nanometers or greater than 700 nanometers) the word "invisible" shall precede the word "radiation" on all warning signs and labels. Each class II, III, and IV laser product which is not military exempt must state the maximum power output of laser radiation, the pulse duration when appropriate, and the laser medium or emitted wavelength on the warning label attached to the device.

4-3.5 Laser safety warning signs for posting at laser facilities and at laser ranges are stocked at the Naval Inventory Control Point, Naval Publication and Forms Branch, 700 Robbins Avenue, Philadelphia, PA 19111-5098. For information concerning these forms, contact (215) 697-2626 or DSN 442-2626.

4-4. TRAINING

All personnel in areas using lasers shall be informed about the potential hazard associated with accidental exposure to this form of radiation. In particular, the extraordinary danger of eye damage due to the optical amplification and efficient absorption by this organ shall be emphasized. Class III and IV lasers may also cause skin damage or damage to material by fire or explosion due to rapid heating from a focused beam. At a minimum, laser safety training shall include the requirements of OPNAVINST 5100.27/MCO 5104.1 (series).

4-5. MEDICAL SURVEILLANCE

Bureau of Medicine and Surgery Instruction (BUMEDINST) 6470.23 (series) gives medical surveillance requirements and casualty management procedures for personnel exposed to laser radiation.

4-6. COMMAND LASER SAFETY PROGRAM

4-6.1 When required [based upon type of laser(s) employed], each command should establish a laser safety program and appoint a laser safety officer as per OPNAVINST 5100.27/MCO 5104.1 (series) and ANSI Z136.1.

4-6.2 When required, a laser safety officer shall be appointed to coordinate the safety aspects of lasers and their use. This appointment shall be contingent on the successful completion of laser safety officer training as described in OPNAVINST 5100.27/MCO 5104.1 (series).

4-7. CALCULATION OF LASER SAFE DISTANCES AND PERMISSIBLE LASER EXPOSURE LEVELS

Methods to calculate laser safe distances and permissible laser exposure levels are specified in appendix B of ANSI Z136.1. As per OPNAVINST 5100.27/MCO 5104.1 (series), only certified Laser Safety Specialists may make such calculations. The Navy's primary point of contact for making these calculations is Naval Surface Warfare Center, Dahlgren Division (G71). See paragraph 4-8.1 for laser technical assistance information.

4-8. LASER TECHNICAL ASSISTANCE

4-8.1 Interested parties may obtain technical assistance and advice regarding laser safety by accessing the official Navy Web site (www.navylasersafety.com) or by contacting:

a. For medical and industrial laser operations: Navy Environmental Health Center, 620 John Paul Jones Circle, Suite 1100, Portsmouth, VA 23708-2103, (757) 953-0700, (757) 621-1967, DSN 377-0700, or DSN 377-1967.

b. For laser systems and certification surveys of laser firing ranges (funding for services shall be provided by the requesting command):

1. Laser Hazard Evaluations and Range Surveys: Commander, Naval Surface Warfare Center, Dahlgren Division (G71), 17320 Dahlgren Road, Dahlgren, VA 22448-5100, (540) 653-1060/1149, DSN 249-1060/1149, fax (540) 653-8453, www.navylasersafety.com.

2. Laser Range Surveys: Commander, Naval Surface Warfare Center, Corona Division (SE41), P.O. Box 5000, Corona, CA 92878-5000, (909) 273-4142 or DSN 933-4142.

c. For laser bioeffects and medical research issues, or assistance in evaluating laser-induced injuries, contact the Naval Health Research Center-Detachment Brooks AFB, 8301 Navy Road, Brooks AFB, TX 78235-5365, (210) 536-4699/6552, DSN 240-4699/6552, or fax (210) 536-6439/6528.

d. For guidance on laser exposure limits and health issues, contact the Non-Ionizing Radiation Health Branch, Bureau of Medicine and Surgery (MED 212), 2300 E Street NW, Washington, DC 20372-5300, (202) 762-3444, DSN 762-3444, or fax (202) 762-0931.

4-8.2 Naval Sea Systems Command (SEA-00T) is the technical lead agent for all Navy/Marine Corps laser safety. Naval Surface Warfare Center, Dahlgren Division (G71), is the lead Navy technical laboratory for all technical issues pertaining to lasers used in, by, and for the Navy and Marine Corps.

CHAPTER 5

IONIZING RADIATION

5-1. INTRODUCTION

Ionizing radiation is the electromagnetic or particulate emanations produced by radiation sources. These emanations can cause ionization; that is, the ejection of electrons from atoms. Ionization within the cells or tissues of the body can occur as the result of exposure to alpha particles, beta particles (electrons), neutrons, protons, or other atomic or subatomic particles, or of exposure to gamma rays, x-rays, or other electromagnetic waves capable of ejecting electrons from atoms.

5-2. UNITS OF MEASUREMENT

a. Electron Volt (eV) - A unit of energy equal to the energy gained by an electron in passing from a point of low potential to a point one volt higher in potential. One eV equals 1.602×10^{-12} ergs (1.602×10^{-19} joules) of energy.

b. Rem - An equilibration of the dose of ionizing radiation to the body in terms of its estimated biological effect, relative to an absorbed dose of 1 roentgen of high-voltage x-rays. The rem shall be the unit of dose for record purposes.

c. Roentgen (R) - That amount of x- or gamma radiation which will produce 2.083×10^{9} ion pairs in 1 cc of air under standard conditions. For the purpose of these regulations, 1 roentgen of x- or gamma radiation is considered to deliver 1 rad.

d. Rad - A unit of absorbed ionizing radiation equal to 100 ergs of energy per gram.

5-3. METHODS OF DETECTING IONIZING RADIATION

Ionizing radiation cannot be detected by the senses. It can be detected only by devices which respond to the ionizing properties of radiation. These detecting devices include Geiger counters, scintillation counters, ionization chambers (including pocket dosimeters), phosphors, transformation reaction counters (including photographic emulsions), and free radical counters.

5-4. RADIAC EQUIPMENT

The purpose of radiac equipment is to detect and indicate the amount of radioactivity present in a given area. The type of radioactivity detected (alpha and beta particles, x-ray, gamma radiation, fast and slow neutrons) is determined by the type of radiac equipment used. Radiac equipments vary from small, portable, battery-operated sets to large, integrated monitoring systems requiring associated electronic equipment. Basically, radiac equipments contain one or a combination of the following:

a. Radiac Detector - A device that is sensitive to radioactivity of free nuclear particles and reacts in a manner that can be interpreted or measured by various means.

b. Radiacmeter - A device that detects the presence of radioactivity and indicates the dose rate or total dose.

c. Computer-Indicator - A device that computes and indicates radiac data received from the radiac detector or detectors.

5-5. HAZARD LEVEL

All personnel working in high-intensity levels of radioactivity must exercise caution to prevent bodily damage. While the radiation from radioactive substances cannot be seen or felt, prolonged or extensive exposure may result in serious damage. One-tenth of a roentgen per week (0.1 R/week or 100 mR/week) is considered to be the maximum permissible exposure.

5-6. PRECAUTIONS

5-6.1. Safety precautions and instructions on handling radioactive material are contained in Naval Medical Command (NAVMED) Publication P-5055, Radiation Health Protection Manual, and various National Institute of Standards and Technology handbooks.

5-6.2. Precautions should be taken not to attempt any measurement of ionic radiation while located in a radio-frequency (RF) electromagnetic field. Radiac detectors are susceptible to electromagnetic fields and will produce an erroneous reading which could be mistaken for ionic radiation. The reverse is also true. Do not attempt to measure RF radiation while in the environment of ionic radiation.

5-6.3. The accumulated dose of radiation to the whole body, head and trunk, active blood-forming organs, genitals, or lens of the eye shall not exceed 3 rem in any calendar quarter nor 5 (N-18) rem total lifetime dose, where N equals the present age in years.

CHAPTER 6

HAZARDS OF ELECTROMAGNETIC RADIATION TO FUEL

6-1. INTRODUCTION AND BACKGROUND

6-1.1. A fuel-handling operation is defined as the act of transferring fuel from one container to another. This includes, but is not limited to, fueling aircraft, vehicles, or equipment from a pump or a portable container; transferring fuel from a storage container to a fuel truck; and transferring fuel from a pump to a portable container. While fixed shore-station antennas are usually located a sufficient distance from fuel pumps and fuel storage areas in order to prevent a hazard, care should be taken to ensure that fueling operations involving transfer of fuel from a portable container to a vehicle or equipment (such as lawnmowers, generators, construction equipment, etc.) do not occur within the prescribed safe separation distances for shore-station transmitters if main-beam illumination of the area is possible. In addition, mobile and handheld transmitters should not be operated within the minimum safe separation distance from any fuel-handling operation.

6-1.2. The possibility of accidentally igniting fuel vapors by radio frequency (RF)-induced arcs during fuel-handling operations in proximity to high-powered communication and radar transmitting antennas has been the subject of extensive study and research. Tests aboard ships and in laboratories have shown that, while it is possible to ignite volatile fuel-vapor mixtures by induced RF energy, the probability of ignition during normal fueling procedures is remote, given the number of conditions that must exist simultaneously in order to support combustion.

6-1.3. The probability of accidental ignition has been reduced in recent years by the following:

a. Location of transmitting antennas away from fueling stations and vents.

b. Introduction of pressurized fueling systems on aircraft.

c. The move to almost exclusive use of JP-5 aircraft fuels aboard ship.

Even though the potential fuel hazard from electromagnetic radiation may not be as great as formerly believed and has been reduced by the foregoing measures, it is still present when handling the more volatile JP-4 fuel, motor vehicle gasoline (MOGAS), or aviation gasoline (AVGAS). Personnel handling fuels afloat and ashore should be aware of this potential hazard, which is more fully described herein.

6-2. PHYSICAL NATURE OF COMBUSTION

6-2.1. The probability of ignition of fuel vapors by RF-induced arcs is small, since the following conditions must occur simultaneously for ignition to take place:

a. A flammable fuel-air mixture must be present within range of the induced arcing.

b. The arc must contain a sufficient amount of energy to cause ignition.

c. The gap across which the arc occurs must be a certain minimum distance.

6-2.2. The limits of flammability of MOGAS are between 1.25 percent and 7.6 percent by volume of gasoline vapor in the air. Handling of gasoline under normal operating conditions does not produce a flammable atmosphere except close to fuel vents, open fuel inlets, or spilled gasoline. With no ventilation, flammable gasoline vapors, being heavier than air, may travel or spill down an inclined surface, such as that provided by a wing or fuselage of an aircraft, before becoming diluted. However, if air movement (wind) is present, the gasoline vapor is diluted and dispersed rapidly, reducing the zone of possible ignition. The flammability of hydrocarbon fuels is also influenced by temperature. Figure 6-1 shows the effect on flammable ranges due to increasing fuel temperatures. Figure 6-2 shows the temperature-flammability regions for different types of commonly used fuels.

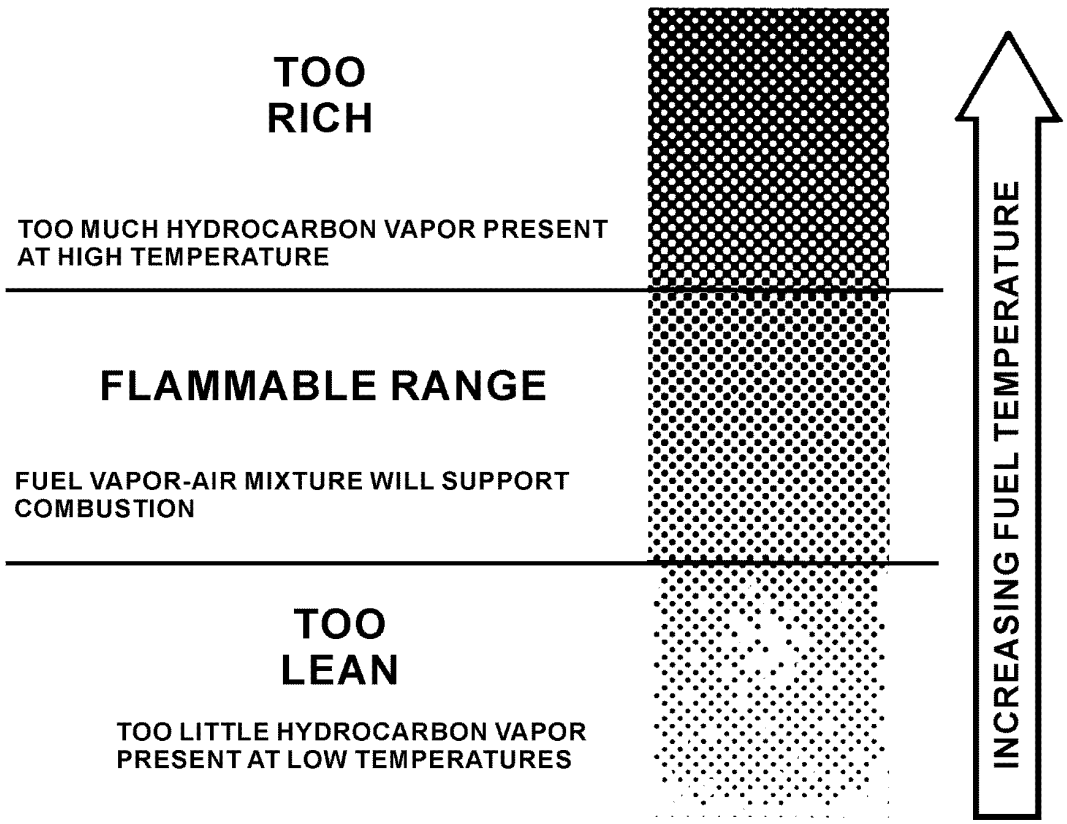

FIGURE 6-1. Effect of Temperature in Generating Hydrocarbon Fuel Flammable Vapors

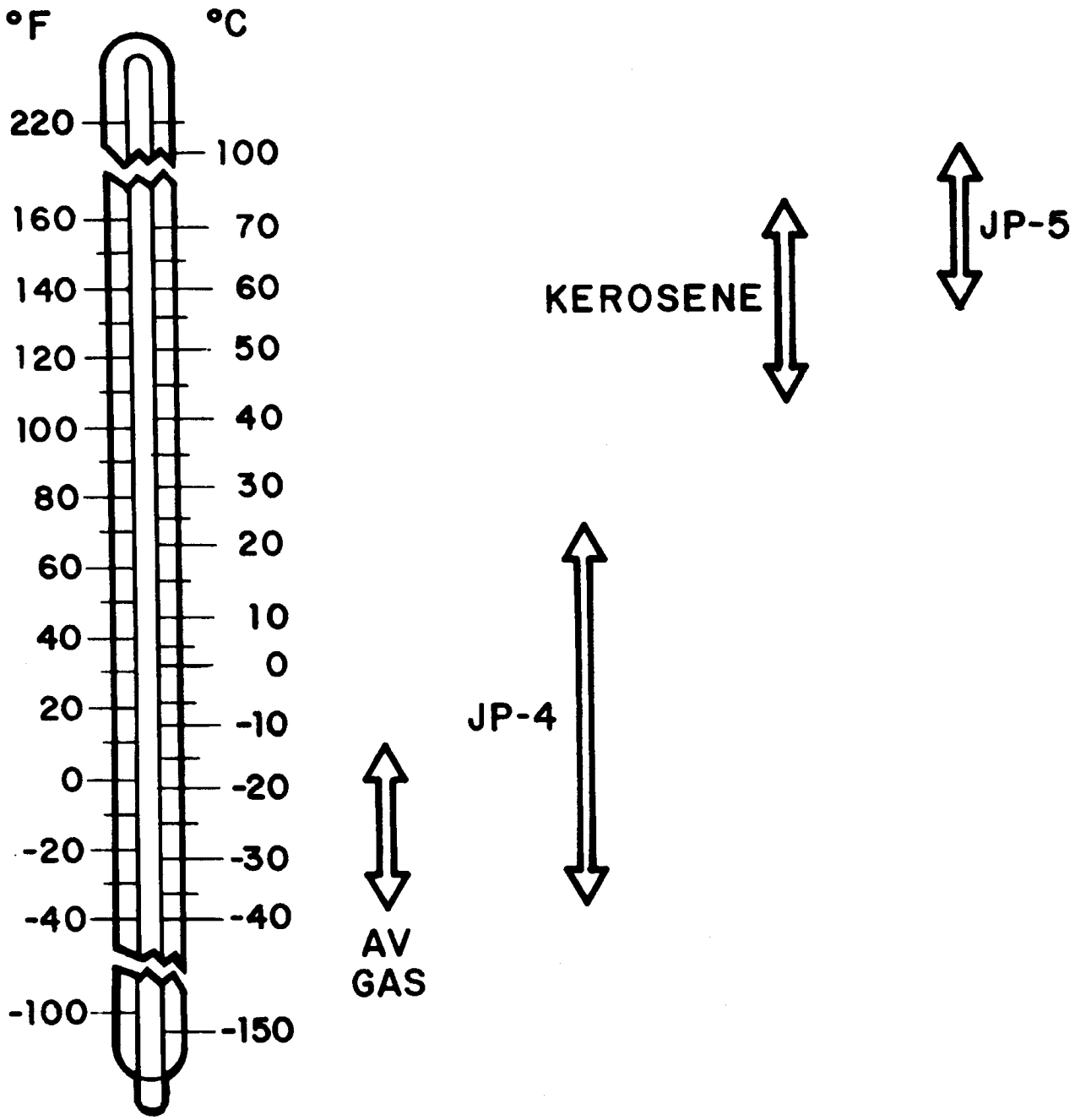

FIGURE 6-2. Temperature-Flammability Ranges for Fuels

6-2.3. The presence of an odor of gasoline is not a reliable indicator of flammability since the effect of odorous substances varies among observers. However, in comparative tests of

individual response, it was found that the odor of gasoline was quite perceptible at concentrations of less than 1 percent of the lower flammability limit. At 100 percent, a very strong odor existed; at 125 percent, the gas-air mixture was noticeably irritating to the eyes and nasal passages.

6-2.4. Although tests conducted under laboratory conditions to determine the minimum arc energy necessary to cause ignition have been inconclusive, it is known that the arc energy is a determining factor for ignition of fuel-air mixtures. From actual measurements of voltages and currents on aircraft located on a carrier deck near an energized transmitting antenna, it was found that a volt-ampere product of 50 or more was required to ignite gasoline in an explosive vapor test device. Measurements also have been made on various fueling configurations to relate the required 50 volt-ampere ignition energy to the surrounding electric field intensity. Field intensity can, in turn, be related to the radiated power and distance from an antenna.

6-2.5. A minimum spark gap of about 0.5 millimeter (0.02 inch) is required for ignition of a fuel-air mixture. In terms of fueling operations, this generally requires a metal-to-metal contact and subsequent withdrawal to produce a drawn arc of sufficient length to ignite a fuel-air mixture. Ensuring that the static ground wires, tie-down cables, and other metallic connections to the aircraft or motor vehicle are properly made before fueling or defueling operations commence, and are not disturbed until after the operation is finished, will greatly reduce the possibility of accidental ignition.

6-3. HANDLING PRECAUTIONS FOR FUELS IN AN RF ENVIRONMENT

6-3.1 INTRODUCTION. It is assumed that personnel engaged in fueling operations will be familiar with and observe the safety precautions contained in applicable Naval Sea Systems Command/Naval Air Systems Command instructions and directives.

Three hydrocarbon-based fuels are currently used throughout the Navy: marine diesel, aviation jet fuel (JP-5/JP-8), and MOGAS. Of these, only MOGAS is considered to present a shipboard hazards of electromagnetic radiation to fuel (HERF) concern during fuel-handling operations.

6-3.2 FUELING PRECAUTIONS. The total elimination of RF-induced arc hazards to fuels probably cannot be achieved, particularly aboard ship, without placing unacceptable restrictions on flight and ship operations. Although precise criteria have not been fully developed, the following guidance, applicable to fueling operations both afloat and ashore, will minimize the risk of accidental ignition. This guidance shall govern in the event of conflict with other directives.

a. Do not energize any transmitter (radar or communications) on the aircraft or motor vehicle being fueled or on adjacent aircraft or motor vehicles.

b. Do not make or break any electrical, static ground wire, tie-down connection, or any other metallic connection to the aircraft or motor vehicle while it is being fueled. Make the connections before fueling commences; break them afterwards.

6-3.3 TRANSMITTER RESTRICTIONS. JP-5 and marine diesel fuels are used and stored in large quantities aboard ships and at shore stations. There are no HERF issues associated with these fuels since their vapor pressures are low enough that, under ordinary temperatures, there is virtually no chance of fire from an RF-induced arc. However, highly volatile MOGAS is also handled and stored aboard most Navy ships and at shore facilities.

The following precautions and RF transmitter restrictions are required (1) during shipboard fuel-handling operations involving MOGAS and (2) during shore-based fuel-handling operations involving MOGAS and/or AVGAS.

6-3.4. Radar and communication systems which operate at or above 225 MHz, and which are capable of mainbeam illumination of fuel-handling areas with a peak power density of 5 W/cm^2 (5000 mW/cm^2) or greater, shall:

a. cease transmitting during fueling operations,

b. be inhibited from illuminating these areas by suitable cutout devices or operational procedures, or

c. be located a sufficient distance from fueling areas such that the power density (in the fueling area) is less than 5 W/cm^2.

Figure 6-3 provides a means to calculate the minimum distance required to achieve a power density of 5 W/cm^2. A separation distance in excess of this number should be established to ensure that the power density in the fueling area is less than 5 W/cm^2.

6-3.4.1 For fixed, mobile, and aircraft communication systems which operate *below* 225 MHz:

a. Antennas radiating 250 watts or less shall be installed no less than 50 feet from fueling operations/fuel-handling areas.

b. Antennas radiating more than 250 watts shall be separated from fueling/fuel-handling areas such that the power density in the fueling area is no greater than would exist at 50 feet from an antenna radiating 250 watts (0.009 mW/cm^2).

If the required separation distance/power density cannot be achieved, the transmitter shall be shut down during fueling/fuel-handling operations.

Figure 6-4 provides the means to calculate the separation distance required to achieve a power density equivalent to that existing 50 feet from an antenna radiating 250 watts (0.009 mW/cm^2).

6-3.4.2 For handheld communication transmitters, antennas radiating 10 watts or less shall remain at least 10 feet away from fueling/fuel-handling operations.

The following equation may be used to calculate the distance from a transmitting antenna where the power density will be approximately 5 W/cm^2. A separation distance greater than that calculated should be established to ensure that the power density in the fueling area will be less than 5 W/cm^2.

$$D = \sqrt{\frac{PG}{4\Pi PD}} = \frac{\sqrt{PG}}{792.7}$$

where:

D = distance (meters),

P = peak transmitter power (watts),

G = antenna gain ratio= $(10^{\frac{\text{antenna gain (in dBi)}}{10}})$,

Π = numeric value of 3.14159 (pi),

PD = desired power density (in W/m^2) = 5 W/cm^2 = 50,000 W/m^2.

Example

Calculate how far the antenna for the AN/SPS-48E radar (2905-3058 MHz) must be from the fueling area to ensure that the (main beam) power density in the fueling area does not exceed 5 W/cm^2.

P = 2,500,000 watts

Antenna Gain = 38.6 dBi

antenna gain ratio=$(10^{\frac{38.6}{10}}) = (10^{3.86})$ = 7244.4

$$D = \frac{\sqrt{2,500,000(7244.4)}}{792.7}$$

$$D = \frac{\sqrt{18,110,899,000}}{792.7}$$

$$D = \frac{134576.7}{792.7} = 169.8\ meters \times 3.28 = 557.0 feet$$ (see note)

NOTE: This derived value represents the minimum distance from the *main beam* of the SPS-48E radar required to achieve a power density of 5 W/cm^2. In the case of shipboard radar systems, since the main beam does not typically illuminate own-ship fueling areas or weather decks, power densities in these areas will be less than 5 W/cm^2. However, during operations with other surface units (i.e., UNREP, plane guard), emission control procedures may be required between participating units to ensure that the (main beam) power density existing at topside fuel-handling areas is less than 5 W/cm^2 during fueling operations.

Ashore, the location of fixed and mobile radar/communication systems relative to fueling/fuel-handling areas must be determined/controlled to ensure that the main beam power density in those areas is less than 5 W/cm^2 during fuel-handling operations. RF hazard surveys may be requested as discussed in paragraph 1-5.c., of this manual.

FIGURE 6-3. HERF Safe Separation Distance Calculation for MOGAS/AVGAS (Radar and Communication Systems 225 MHz and Above)

The following equation may be used to calculate the separation distance required to achieve a power density equivalent to that existing 50 feet from an antenna radiating 250 watts (equivalent to 0.009 mW/cm^2 or 0.09 W/m^2).

$$D = \sqrt{\frac{PG}{4\Pi PD}} = \frac{\sqrt{PG}}{1.06}$$

where:

D = distance (meters),

P = peak transmitter power (watts),

G = antenna gain ratio= $(10^{\frac{\text{antenna gain (in dBi)}}{10}})$,

Π = numeric value of 3.14159 (pi),

PD = desired power density (in W/m^2) = 0.09 W/m^2.

Example

Calculate how far an antenna for the AN/URC-131 transmitter (2-30 MHz) must be from the fueling area to ensure that the power density in the fueling area does not exceed 0.09 W/m^2. A greater separation distance will provide an increased margin of safety.

P = 1,000 watts

Antenna Gain = 2.1 dBi

antenna gain ratio=$(10^{\frac{2.1}{10}}) = (10^{.21})$ = 1.62

$$D = \frac{\sqrt{1,000(1.62)}}{1.06}$$

$$D = \frac{\sqrt{1620}}{1.06}$$

$$D = \frac{40.25}{1.06} = 37.9\ meters \times 3.28 = 124.5 feet$$

FIGURE 6-4. HERF Safe Separation Distance Calculation for MOGAS/AVGAS (Communication Systems Below 225 MHz)

This page left intentionally blank

APPENDIX A

DEFINITIONS AND ABBREVIATIONS

A-1. INTRODUCTION.

This appendix contains definitions of terms and abbreviations related to radio-frequency (RF) radiation hazards to personnel, volatile flammable liquids, and ordnance. In addition, the terms and abbreviations used in the laser radiation hazard coverage are contained herein.

A-2. DEFINITIONS.

Antenna - That part of a transmitting or receiving system which is designed to radiate or to receive electromagnetic waves.

Antenna, Dipole - A straight radiator, usually fed in the center, and producing a maximum of radiation in the plane normal to its axis. The length specified is the overall length. Common usage considers a dipole antenna to be a metal radiating structure which supports a line current distribution similar to that of a thin straight wire a half wavelength long, so energized that the current has two nodes, one at each of the far ends.

Antenna Directivity - The ratio of the maximum radiation intensity to the average radiation intensity produced at a given distance from a given transmitting antenna. The directivity of an antenna is the same whether the antenna is used as a receiving antenna or a transmitting antenna.

Antenna Gain, Relative - The ratio of the power gain of an antenna relative to a standard reference antenna. The relative gain may be in dB or it may be numeric. The standard antenna is usually a half-wave dipole or an isotropic antenna. The latter is preferred even though such an antenna does not exist. (See Isotropic Antenna.)

Antenna Regions - The defined spatial areas surrounding a radiating antenna.

Arc - An electrical discharge of relatively long duration which may be brought about by separating current-carrying electrodes or may result from a spark discharge between initially separated electrodes, provided that the energy source is sufficient to maintain the arc.

Attenuation - A decrease in signal magnitude in transmission from one point to another expressed as a ratio or in decibels.

Attenuator - A device for reducing the amplitude of electromagnetic energy without introducing appreciable distortion.

Average Power ($\overline{W}$) - The time-average rate of energy transfer:

$$\overline{W} = \frac{1}{t_2 - t_1}\int_1^2 W(t)\,dt.$$

For radar calculations, average power ($\overline{W}$) = peak power x pulse width x pulse repetition frequency.

Averaging Time (T_{avg}) - The appropriate time period over which exposure is averaged for purposes of determining compliance with a permissible exposure limit.

Beam - A flow of electromagnetic radiation or of particles that is essentially unidirectional.

Beamwidth - The angular width between half-power points on the major lobe of an antenna radiation pattern for a specified plane.

Computer-Indicator - A device that computes and indicates radiac data received from the radiac detector or detectors.

Continuous Exposure - Exposure for durations exceeding the corresponding averaging time. Exposure for less than the averaging time is called short-term exposure.

Continuous Wave - Waves, the successive oscillations of which are identical under steady-state conditions.

Controlled Environment - A location where exposure to electromagnetic energy in excess of the permissible exposure limits (PELs) specified for the general population may be incurred by persons who are aware of the potential for such exposure. Examples of controlled environments include radar and communication equipment spaces and the flight deck and weather decks of a ship. PELs for controlled environments are listed in tables C-1 and C-2.

Cryogenics - Relating to the production of very cold temperatures.

Decibel (dB) - A dimensionless unit which is a measure of the ratio of two powers. The number of decibels, n, corresponding to the ratio of powers P_1 and P_2 is as follows:

$$n = 10 log_{10} \frac{P_1}{P_2}.$$

If conditions are such that the ratio of current I_1/I_2 or voltages V_1/V_2 (or analogous quantities) is the square root of the corresponding power ratio, then the number of dB by which the corresponding powers differ is expressed by the following equations:

$$n = 10 log_{10} \frac{P_1}{P_2} = 20\ log_{10} \frac{I_1}{I_2} \text{ or}$$

$$n = 10 log_{10} \frac{P_1}{P_2} = 20\ log_{10} \frac{V_1}{V_2}.$$

Depth of Penetration - For a plane electromagnetic wave incident on the boundary of a medium, the distance from the boundary into the medium along the direction of propagation in the medium, at which the field strengths of the wave have been reduced to 1/e (e=2.7183) of the boundary values.

Duty Cycle - The ratio of pulse duration to the pulse period of a periodic pulse train. A duty factor of 1.0 corresponds to continuous-wave operation.

Effective Area - The effective area of an antenna in any specified direction is equal to the square of the wavelength multiplied by the power gain (or directive gain) in that direction and divided by 4π. That is:

$$A = \frac{G\lambda^2}{4\pi}.$$

Electric Field (E) - A state of the region in which stationary charged bodies are subject to forces by virtue of their charges.

Electric Field Strength (E) - The magnitude of the electric field vector. The electric field strength represents the magnitude of the electric force (F) on a positive test charge (q) at a point divided by the charge:

$$E = \frac{F}{q}.$$

Electric field strength is expressed in units of V/m.

Electromagnetic Energy - The energy in an electromagnetic wave or field.

Electromagnetic Environment (EME) - The composite electromagnetic field generated by natural and manmade sources.

Electromagnetic Radiation (EMR) - Emission of energy in the form of electromagnetic waves in any portion of the electromagnetic spectrum.

Electromagnetic Wave (EMW) - A wave characterized by variations of electric and magnetic fields. EMWs are known as radio waves, heat rays, light rays, etc., depending on the frequency at which the field varies.

Electron Volt (eV) - A unit of energy equal to the energy gained by an electron in passing from a point of low potential to a point one volt higher in potential. One eV equals 1.602×10^{-12} ergs (1.602×10^{-19} joules) of energy.

Electronic Equipment - Equipment which produces useful internal signals, or serves functionally by generating, transmitting, receiving, storing, processing, or using information in the broadest sense. Examples are communications, radar, sonar, countermeasures, navigation, computers, test equipment, etc.

Erg - The unit of work and of energy in the centimeter-gram-second systems. The erg is 10^{-7} joule.

Exposure - The subjection of a person to electric, magnetic, or electromagnetic fields or to contact currents other than those originating from physiological processes in the body and other natural phenomena.

Far-Field Region - That region of the field of an antenna where the angular field distribution is essentially independent of the distance from the antenna. In this region (also called the free-space region), the field has a predominantly plane-wave character; i.e., locally uniform distributions of electric field strength and magnetic field strength in planes transverse to the direction of propagation which decay inversely (1/r) with distance r from the antenna. For aperture antennas, the far-field region is also referred to as the Fraunhofer region. Refer to appendix D.

Field Intensity - The measure of the magnitude of an electromagnetic field. For communication frequencies (200 kHz to 1.0 GHz), field intensity is a measurement of the electrical field component expressed in V/m. For radar frequencies (200 MHz to 100 GHz), field intensity is a measurement of the average power density expressed in mW/cm^2.

Flammable - A relative term that applies to liquids, gases, and solids, indicating that they are easily ignited in air.

Flammable Limits (Flammability Limits) - The minimum and maximum concentration of a vaporized material in air which will propagate flame if ignited. The difference between the upper and lower flammability limit is known as the flammable or explosive range. The limits are usually expressed in terms of percentage of vapor by volume in air.

Fraunhofer Region - See Far-Field Region.

Frequency Spectrum - Range of frequencies of electromagnetic energy from both natural phenomena and manmade sources; generally extends from less than 0.001 Hz to greater than 10^{22} Hz. The radio-frequency spectrum is, loosely, that portion of the total spectrum used for information communication.

Fresnel Region - See Near-Field Region.

Hertz (Hz) - The unit of frequency, one cycle per second.

Horn Antenna - An antenna having the shape of a tube whose cross-sectional area increases toward the open end through which radio waves pass.

Infrared - Electromagnetic waves in the approximate frequency range of $3x10^{11}$ to $4x10^{14}$ Hz (wavelength: 700 nm to 1 mm).

Ionizing Radiation - Electromagnetic waves with sufficient energy to produce ions; usually x-ray frequencies and higher.

Isotropic Antenna - A hypothetical (lossless) antenna having equal radiation intensity in all directions. Isotropic antennas do not exist physically but represent a convenient means of expressing directional properties of actual antennas.

Joule - The unit of energy in the metric system. One joule is equivalent to 1 watt/second.

Magnetic Field Strength (H) - A field vector that is equal to the magnetic flux density divided by the permeability of the medium. Magnetic field strength is expressed in units of A/m.

Magnetic Flux Density (B) - A field vector quantity that results in a force (F) acting on a charge(s) (q) moving with velocity (v). Magnetic flux density (B) is defined by the following equation:

$$\frac{\vec{F}}{q} = \left(\vec{v} \times \vec{B}\right).$$

Magnetic flux density is expressed in units of tesla (T). One tesla is equal to 10^4 gauss (G).

Main Beam of Radar - The "main beam" as used herein refers to the solid angular arc describing the maximum radiation lobe of the radar, outside of which the power level is at least 20 dB below the maximum power level radiated.

Maximum Permissible Exposure (MPE) for Lasers - The maximum radiation (for a given laser) to which a person can be exposed without adverse biological effect to the eye or skin. The MPE is determined by three factors: laser wavelength, laser energy during exposure, and duration of the exposure. MPE values for the eyes and skin are listed in table 5 and table 7 of ANSI Z136.1-2000.

Microwaves - A term used rather loosely to identify radio waves in the frequency range of 300 MHz to 300,000 MHz.

Near-Field Region - A region generally in proximity to an antenna or other radiating structure in which the electric and magnetic fields do not have a substantially plane-wave character, but vary considerably from point to point. The near-field region is further subdivided into the reactive near-field region, which is closest to the radiating structure and contains most or nearly all of the stored energy, and the radiating near-field region, where the radiation field predominates over the reactive field but lacks substantial plane-wave character and is complicated in structure. For aperture antennas, the near-field region is also referred to as the Fresnel region. Refer to appendix D.

NOTE

For most antennas, the outer boundary of the reactive near-field region is commonly taken to exist at a distance of one-half wavelength from the antenna surface.

Permissible Exposure Limit (PEL) - The peak electric and magnetic field strengths (or associated plane-wave equivalent power densities) and the induced and contact currents to which a person may be exposed without harmful effects, even under repeated or long-term exposure conditions. In controlled environments, the PEL is based on maintaining exposure below a specific absorption rate (SAR) of 0.4 W/kg. That level incorporates a safety factor of 10 below a SAR of 4 W/kg that is considered a threshold, above which there is an increasing possibility of adverse biological effects, but at or below which there is no established evidence of any adverse health effects. In uncontrolled environments, where personnel access is not restricted, lower levels (equivalent to a SAR of 0.08 W/kg) have been adopted.

Polarization - Term used to describe the orientation of a time-varying electric or magnetic field vector. If the vector is confined to a plane containing the direction of propagation as an axis but remains constant in magnitude, the wave is circularly polarized. If the amplitude does not remain constant, so that the end of the vector traces out an ellipse, the wave is elliptically polarized.

Power Density (S) - Power per unit area normal to the direction of propagation, usually expressed in units of watts per square meter (W/m^2) or, for convenience, units such as milliwatts per square centimeter (mW/cm^2) or microwatts per square centimeter ($\mu W/cm^2$). For plane waves, power density, electric field strength (E), and magnetic field strength (H) are related by the impedance of free space; i.e., 377Ω.

Power Density, Peak - The maximum instantaneous power density occurring when power is transmitted.

Power Density, Plane-Wave Equivalent - A commonly used term associated with any electromagnetic wave, equal in magnitude to the power density of a plane wave having the same electric (E) or magnetic (H) field strength.

Rad - A unit of absorbed ionizing radiation equal to 100 ergs of energy per gram.

Radar - Equipment which radiates directional electromagnetic waves and uses the reflection of such waves from distant objects to determine their existence or position. The name is derived from the initial letters of the expression RAdio Detection And Ranging. As used in this manual, radar includes countermeasures, navigational, and other similar types of electronic equipment.

Radiac - An acronym derived from the words "RadioActivity, Detection, Indication And Computation" and used as an all-encompassing term to designate various types of radiological measuring instruments or equipment.

Radiac Detector - A device that is sensitive to radioactivity of free nuclear particles and reacts in a manner that can be interpreted or measured by various means.

Radiacmeter - A device that detects the presence of radioactivity and indicates the dose rate or total dose.

Radiated Field - That portion of the total electromagnetic field produced by a current-carrying conductor or aperture, the magnitude of whose electric or magnetic vector varies inversely as the distance from the conductor, and the energy of which is propagated away from the conductor. This region is made up of two distinct parts: the *Fresnel* or *near-field region* and the *Fraunhofer* or *far-field region*. The distinction between near-field and far-field regions has no practical meaning for small radiators but is extremely important for large antennas.

Radiation Hazards (RADHAZ) - Radio-frequency electromagnetic fields of sufficient intensity to produce harmful biological effects in humans, cause spark ignition of volatile combustibles, or actuate electroexplosive devices.

Radio Frequency (RF) - A frequency between 3 kHz and 300 GHz used for radio and radar transmission.

NOTE

Although the RF spectrum is formally defined in terms of frequency as extending from 0 to 3000 GHz, for purposes of this standard, the frequency range of interest is 3 kHz to 300 GHz.

Rem - An equilibration of the dose of ionizing radiation to the body in terms of its estimated biological effect, relative to an absorbed dose of 1 roentgen of high-voltage x-rays. The rem shall be the unit of dose for record purposes.

RF Burn - A radio-frequency (RF) burn hazard exists if there is sufficient induced RF voltage on a metallic object to cause pain, visible skin damage, or involuntary reaction to a person who comes in contact with the object. The RF burn phenomenon is distinct from electrical shock and is the result of heating of the skin by RF currents.

Roentgen (R) - That amount of x- or gamma radiation which will produce 2.083×10^9 ion pairs in 1 cc of air under standard conditions. For the purpose of these regulations, 1 roentgen of x- or gamma radiation is considered to deliver 1 rad.

Root Mean Square (rms) - The effective value, or the value associated with joule heating, of a periodic electromagnetic wave. The rms value is obtained by taking the square root of the mean of the squared value of a function.

Shielding - A housing, screen, or other object, usually conductive, that substantially reduces the magnitude of electric or magnetic fields on one side thereof, upon devices or circuits on the other side.

Spark - An electrical discharge of relatively short duration between initially separate electrodes; the discharge may be repetitive.

Spatial Average - The root mean square of the field over an area equivalent to the vertical cross section of the adult human body, as applied to the measurement of electric or magnetic fields in the assessment of whole-body exposure. The spatial average is measured by scanning (with a suitable measurement probe) a planar area equivalent to the area occupied by a standing adult human (projected area). In most instances, a simple vertical, linear scan of the fields over a 2-meter height (approximately 6 feet), through the center of the projected area, will be sufficient for determining compliance with the permissible exposure limits.

Specific Absorption Rate (SAR) - The time derivative of the incremental energy (dW) absorbed by (dissipated in) an incremental mass (dm) contained in a volume (dV) of a given density (ρ):

$$SAR = \frac{d}{dt}\left(\frac{dW}{dm}\right) = \frac{d}{dt}\left(\frac{dW}{\rho\, dV}\right).$$

SAR is expressed in units of watts per kilogram (W/kg).

Specular Reflection - A mirrorlike reflection.

Static Region - The region around a current-carrying conductor where the magnitude of the electromagnetic field varies inversely as the cube of the distance from the conductor, the energy of which returns to the conductor when the current ceases. The static region is part of the near field of an antenna.

Thermal Effect - Generally refers to the heating effects of electromagnetic radiation on materials and people.

Ultraviolet - Electromagnetic waves in the approximate frequency range of $7x10^{14}$ to $3x10^{16}$ Hz (wavelength: 180 nm to 400 nm).

Uncontrolled Environment - Locations where personnel access is uncontrolled, and where radio-frequency (RF) exposures do not exceed the permissible exposure limits specified in tables C-3 and C-4. Such locations generally represent living quarters, workplaces, and public access areas where personnel do not expect to encounter higher levels of RF energy.

Volatile - A relative term which indicates the tendency of a liquid or solid to assume the vapor state (evaporate).

Wavelength (λ) - Of a monochromatic wave, the distance between two points of corresponding phase of two consecutive cycles in the direction of propagation. The wavelength (λ) of an electromagnetic wave (EMW) is related to the frequency (f) and velocity (v) by the expression $\lambda=v/f$. In free space, the velocity of an EMW is equal to the speed of light; i.e., approximately $3x10^8$ m/s.

Whole-Body Irradiation - Pertains to the case in which the entire body is exposed to the incident electromagnetic energy or in which the cross section of the body is smaller than the cross section of the incident radiation beam.

X-Radiation - Electromagnetic radiation of short wavelength (less than 100 Å), usually produced by the bombardment of a metal target by high-energy electrons.

A-3. ABBREVIATIONS.

A/m - Amperes per Meter

ANSI - American National Standards Institute

AVGAS - Aviation Gasoline

BLK - Block

BUMED - Bureau of Medicine and Surgery

BUMEDINST - Bureau of Medicine and Surgery Instruction

cc - Cubic Centimeter

CFR - Code of Federal Regulations

cm - Centimeter

cm^2 - Square centimeters

CO_2 - Carbon Dioxide

dB - Decibel

dBd - dB Relative to Dipole Antenna

dBi - dB Relative to Isotropic Antenna

dBm - Decibel Referred to 1 Milliwatt

dBW - Decibel Referred to 1 Watt

DoD - Department of Defense

DODINST - Department of Defense Instruction

DSN - Defense Switching Network

E-field - Electric Field

EMCON - Emission Control

EMR - Electromagnetic Radiation

EMW - Electromagnetic Wave

eV - Electron Volt

f - Frequency

FDA - Food and Drug Administration

FM - Frequency Modulation

ft - Feet

GHz - Gigahertz (1,000 MHz to 10^9 Hz)

HERF - Hazards of Electromagnetic Radiation to Fuel

HERO - Hazards of Electromagnetic Radiation to Ordnance

HERP - Hazards of Electromagnetic Radiation to Personnel

HF - High Frequency (3-30 MHz)

H-field - Magnetic Field

HP - Hewlett Packard

hr - Hour

Hz - Hertz

IEEE - Institute of Electrical and Electronics Engineers

kg - Kilogram

kHz - Kilohertz (10^3 Hz)

kW - Kilowatt (10^3 watts)

Laser - Light Amplification by Stimulated Emission of Radiation

LSRB - Laser Safety Review Board

m or M - Meter(s)

mA - Milliampere (10^{-3} ampere)

MCO - Marine Corps Order

MHz - Megahertz (10^6 Hz)

min - Minutes

MK - Mark

mm - Millimeter

MOGAS - Motor Gasoline (i.e., automotive gasoline)

MPE - Maximum Permissible Exposure

mR - Milliroentgen

MW - Megawatt (10^6 watts)

mW - Milliwatt (10^{-3} watt)

mW/cm^2 - Milliwatts per Square Centimeter

N_2 - Nitrogen

N/A - Not Applicable

NAVAIR - Naval Air Systems Command

NAVMEDINST - Naval Medical Command Instruction

NAVSEA - Naval Sea Systems Command

nm - Nanometer

NSN - National Stock Number

OPNAV - Chief of Naval Operations

OPNAVINST - Chief of Naval Operations Instruction

PD - Power Density

PEL - Permissible Exposure Limit

R - Roentgen

Radar - RAdio Detection And Ranging

RADHAZ - Radiation Hazards

Radiac - RadioActivity, Detection, Indication And Computation

rev - Revolutions

RF - Radio Frequency

RFR - Radio Frequency Radiation

rms - Root Mean Square

rpm - Revolutions per Minute

SAR - Specific Absorption Rate

sec - Second(s)

SECNAV - Secretary of the Navy

SPAWAR - Space and Naval Warfare Systems Command

TAF - Time Averaging Factor

TAI - Time Average Interval

TX - Transmitter

TXPD - TX Power Density

UHF - Ultrahigh Frequency (300 MHz to 3 GHz)

VHF - Very High Frequency (30 to 300 MHz)

V/m - Volts per Meter

W - Watt

w/ - With

W/kg - Watts per Kilogram

A-4. SYMBOLS.

@ - At

α - Alpha particle

Å - Angstrom

ρ - Density, resistivity

μ - Micro (10^{-6})

Ω - Ohm

π - 3.14159 (pi)

$\propto$ - Varies directly as; is proportional to

λ - Wavelength

$=$ - Equals

$\equiv$ - Is identical with

$\simeq$ - Is approximately equal to

$\sim$ - Is similar to

$<$ - Is less than

$>$ - Is greater than

$\leq$ - Is less than or equal to

$\pm$ - Plus or minus

% - Percent

^{o} - Degree(s)

" - Inches

APPENDIX B

REFERENCE DOCUMENTS

ANSI Document

Z136.1-2000	American National Standard for the Safe Use of Lasers

BUMED Instructions

6470.23 (series)	Medical Management of Non-Ionizing Radiation Casualties

CFR (Code of Federal Regulations)

Title 21, Subchapter J, Parts 1040.10 to 1040.30	Regulations for the Administration and Enforcement of the Radiation Control for Health and Safety Act of 1968

DoD Instruction

6055.11	Protection of DoD Personnel from Exposure to Radio Frequency Radiation and Military Exempt Lasers

IEEE Standard

IEEE C95.1 1999 Edition	Safety Levels with Respect to Human Exposure to Radio Frequency Electromagnetic Fields, 3 kHz to 300 GHz

NAVMED Instruction

P-5055	Radiation Health Protection Manual

OPNAV Instructions

5100.19 (series)	Navy Occupational Safety and Health (NAVOSH) Program Manual for Forces Afloat
5100.23 (series)	Navy Occupational Safety and Health (NAVOSH) Program Manual
5100.27/MCO 5104.1	Navy Laser Hazards Control Program (series)

SECNAV Instructions

5100.14 (series)	Military Exempt Lasers

This page left intentionally blank

APPENDIX C

BIOLOGICAL EFFECTS OF ELECTROMAGNETIC RADIATION AND SAFE EXPOSURE LIMITS

C-1. INTRODUCTION

This appendix describes the biological effects of electromagnetic radiation (EMR) on the human body over the frequency range of 0.003 Hz (3 kHz) to 300 GHz. The limits to which the body can safely be exposed are specified in tables C-1 through C-4 and figures C-1 and C-2.

C-2. FUNDAMENTAL PHYSICAL RELATIONSHIPS

Biological tissue exposed to radio-frequency (RF) energy is heated by means of molecular agitation. Dielectric heating of biological tissue by the absorption of RF energy is the fundamental principle of the microwave oven. It is this potential for heat generation, as well as the possibility for tissue damage, that prompted the development of RF exposure limits.

The basic dosimetric parameter for RF exposure is the (whole-body) specific absorption rate (SAR). The SAR is defined as the amount of energy, absorbed over an exposure time period, divided by the total mass of the body. SAR is expressed in units of watts per kilogram (W/kg). As specified in Department of Defense Instruction (DODINST) 6055.11, the SAR for human exposure is set at a threshold of 0.4 W/kg for controlled environments and 0.08 W/kg for uncontrolled environments. These levels represent a safety factor of 10. At 4 W/kg and above, the chances for adverse biological effects increase, but below this threshold, there is no established evidence of harm to humans.

Whole-body SAR is frequency dependent, and the resonance frequency is about 70 MHz. This resonance occurs at frequencies for which the length of the body is approximately one-half of the free-space wavelength. The average SAR is highest when the incident RF electric field (E-field) is nearly parallel to the human body. When a person is standing on a perfect ground plane, his electrical length appears twice as tall compared to free space, thus lowering the resonant frequency to one-half of free space. For incident magnetic fields (H-fields), SAR is greater when the cross section of the body is perpendicular to the incident H-field.

Because SAR is not a field measurement and can be measured only with laboratory-type equipment, derived equivalent limits that are measurable with commercially available instruments are used to determine the permissible exposure limits (PELs). PELs for controlled and uncontrolled environments are specified in tables C-1 through C-4 and graphically as figures C-1 and C-2. These derived equivalent limits are measurable in terms of root-mean-square (rms) E-field and H-field strengths and plane-wave equivalent power densities (S).

E-field and H-field strengths are expressed in volts per meter (V/m) and amperes per meter (A/m), respectively, while plane-wave equivalent power densities are expressed in milliwatts per square centimeter (mW/cm^2).

Table C-1. PELs for Controlled Environments (Electromagnetic Fields†)

FREQUENCY RANGE (MHz)	ELECTRIC FIELD STRENGTH (*E*) (V/m)	MAGNETIC FIELD STRENGTH (*H*) (A/m)	POWER DENSITY (*S*) E-FIELD, H-FIELD (mW/cm^2)	AVERAGING TIME $\|E\|^2$, $\|H\|^2$, or *S* (MINUTES)
0.003-0.1	614	163	(100, 1000000)‡	6
0.1-3.0	614	16.3/f	(100, 10000/f^2)‡	6
3-30	1842/f	16.3/f	(900/f^2, 10000/f^2)	6
30-100	61.4	16.3/f	(1.0, 10000/f^2)	6
100-300	61.4	0.163	1.0	6
300-3000	--	--	f/300	6
3000-15000	--	--	10	6
15000-300000	--	--	10	616000/f$^{1.2}$

NOTES:

† f is the frequency in MHz. The exposure values in terms of electric and magnetic field strengths are the mean values obtained by spatially averaging the squares of the fields over an area equivalent to the vertical cross section of the human body (projected area).

‡These plane-wave equivalent power density values, although not appropriate for near-field conditions, are commonly used as a convenient comparison with PELs at higher frequencies and are displayed on some instruments in use.

Table C-2. PELs for Controlled Environments (Induced and Contact Current*, **)

FREQUENCY RANGE (MHz)	MAXIMUM INDUCED CURRENT (mA)		MAXIMUM CONTACT CURRENT (mA)
	THROUGH BOTH FEET	THROUGH EACH FOOT	THROUGH ONE HAND
0.003-0.	2000f	1000f	1000f
0.1-100	200	100	100

NOTES:

* f is the frequency in MHz. The current limits given may not adequately protect against startle reactions and burns caused by transient discharges when contacting an energized object.

**In a controlled environment, access should be restricted to limit the rms RF body current (based on the appropriate averaging time) as follows:

1) For freestanding individuals (no contact with metallic objects), RF current induced in the human body, as measured through each foot, should not exceed the following values:

NOTES (Continued):

$I = 1000 f mA (for 0.003 < f \leq 0.1 MHz)$

where

$\bar{I}$ is the average over any 1-second period,
f is the frequency in MHz.
$\tilde{I} = 100 f mA (for 0.1 < f \leq 100 MHz)$ subject to a ceiling limit of 500 mA

where $\tilde{I}$ is the rms current during any 6-minute period.

2) For conditions of possible contact with metallic objects, where making or breaking the contact does not result in any momentary spark discharge or high skin-surface current density causing startle reaction, pain, burns, or other skin injury, maximum RF currents through an impedance equivalent to that of the human body for conditions of grasping contact as measured with a contact current meter shall not exceed the following values:

$\bar{I} = 1000 f mA (for 0.003 < f \leq 0.1 MHz)$

where

$\bar{I}$ is the average over any 1-second period,
f is the frequency in MHz.
$\tilde{I} = 100 f mA (for 0.1 < f < 100 MHz)$ subject to a ceiling limit of 500 mA

where $\tilde{I}$ is the rms current during any 6-minute period.

$$\bar{I} \equiv \frac{1}{T}\int_0^T |I| dt \qquad (f \leq 100 kHz,\ T = 1 \text{ second})$$

and

$$\tilde{I} \equiv \left[\frac{1}{T}\int_0^T I^2 dt\right]^{\frac{1}{2}} \qquad (f > 100 kHz,\ T = 360 \text{ seconds})$$

The means for complying with this current limit can be determined by the user of the PEL as appropriate. The use of protective gloves, the prohibition of metallic objects, or training of personnel may be sufficient to assure compliance with this aspect of the PEL in controlled environments.

Table C-3. PELs for Uncontrolled Environments (Electromagnetic Fields†)

FREQUENCY RANGE (MHz)	ELECTRIC FIELD STRENGTH (*E*) (V/m)	MAGNETIC FIELD STRENGTH (*H*) (A/m)	POWER DENSITY (*S*) E-FIELD, H-FIELD (mW/cm^2)	AVERAGING TIME $\|E\|^2$,*S or* $\|H\|^2$, (MINUTES)	FREQUENCY RANGE (MHz)
0.003-0.1	614	163	(100, 1000000)‡	6	6
0.1-1.34	614	16.3/f	(100, $10000/f^2$)‡	6	6
1.34-3.0	823.8/f	16.3/f	($180/f^2$, $10000/f^2$)	$f^2/0.3$	6
3-30	823.8/f	16.3/f	($180/f^2$, $10000/f^2$)	30	6
30-100	27.5	$158.3/f^{1.668}$	(0.2, $940000/f^{3.336}$)	30	$0.0636f^{1.337}$
100-300	27.5	0.0729	0.2	30	30
300-3000	--	--	f/1500	30	--
3000-15000	--	--	f/1500	90000/f	--
15000-300000	--	--	10	$616000/f^{1.2}$	--

NOTES:

† f is the frequency in MHz. The exposure values in terms of electric and magnetic field strengths are the mean values obtained by spatially averaging the squares of the fields over an area equivalent to the vertical cross section of the human body (projected area).

‡These plane-wave equivalent power density values, although not appropriate for near-field conditions, are commonly used as a convenient comparison with PELs at higher frequencies and are displayed on some instruments in use.

Table C-4. PELs for Uncontrolled Environments (Induced and Contact Current*, **)

FREQUENCY RANGE (MHz)	MAXIMUM INDUCED CURRENT (mA)		MAXIMUM CONTACT CURRENT (mA)
	THROUGH BOTH FEET	THROUGH EACH FOOT	THROUGH ONE HAND
0.003-0.1	900f	450f	450f
0.1-100	90	45	45

NOTES:

* f is the frequency in MHz. The current limits given may not adequately protect against startle reactions and burns caused by transient discharges when contacting an energized object.

** In an uncontrolled environment, where individuals unfamiliar with the phenomenon of induced RF currents may have access, it is recommended that precautions be taken to limit induced currents to values not normally perceptible to individuals, as well as to prevent the possibility of RF burns.

NOTES (Continued):

1) For freestanding individuals (no contact with metallic objects), RF current induced in the human body, as measured through each foot, should not exceed the following values:

$$\bar{I} = 450 f mA (for\ 0.003 < f \leq 0.1 MHz)$$

where

$\bar{I}$ is the average over any 1-second period,
f is the frequency in MHz.

$\tilde{I} = 45\, mA (for\ 0.1 < f < 100 MHz)$ subject to a ceiling limit of 220 mA

where $\tilde{I}$ is the rms current during any 6-minute period.

2) For conditions of possible contact with metallic objects, where making or breaking the contact does not result in any momentary spark discharge or high skin-surface current density causing startle reaction, pain, burns, or other skin injury, maximum RF currents through an impedance equivalent to that of the human body for conditions of grasping contact as measured with a contact current meter shall not exceed the following values:

$$\bar{I} = 450 f mA (for\ 0.003 < f \leq 0.1 MHz)$$

where

$\bar{I}$ is the average over any 1-second period,
f is the frequency in MHz.

$\tilde{I} = 45\, mA (for\ 0.1 < f < 100 MHz)$ subject to a ceiling limit of 220 mA

where $\tilde{I}$ is the rms current during any 6-minute period.

$$I \equiv \frac{1}{T}\int_0^T |I|\,dt \qquad (f \leq 100 kHz, T = 1 \text{ second})$$

and

$$\tilde{I} \equiv \left[\frac{1}{T}\int_0^T I^2\,dt\right]^{\frac{1}{2}} \qquad (f > 100 kHz, T = 360 \text{ seconds}).$$

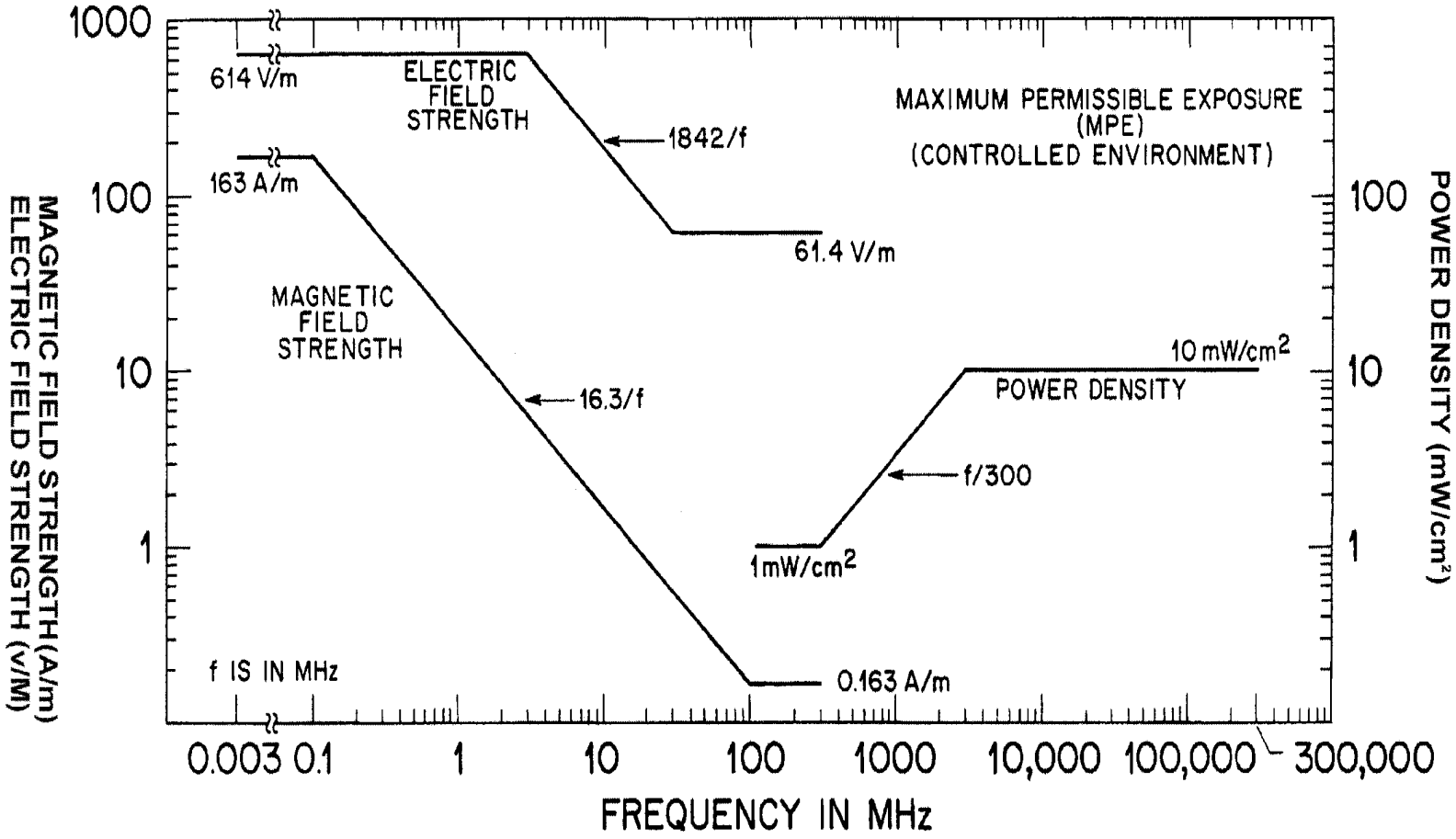

FIGURE C-1. Graphic Representation of Permissible Exposure Limits in Terms of Fields and Power Density for a Controlled Environment

Reproduced with permission of IEEE.

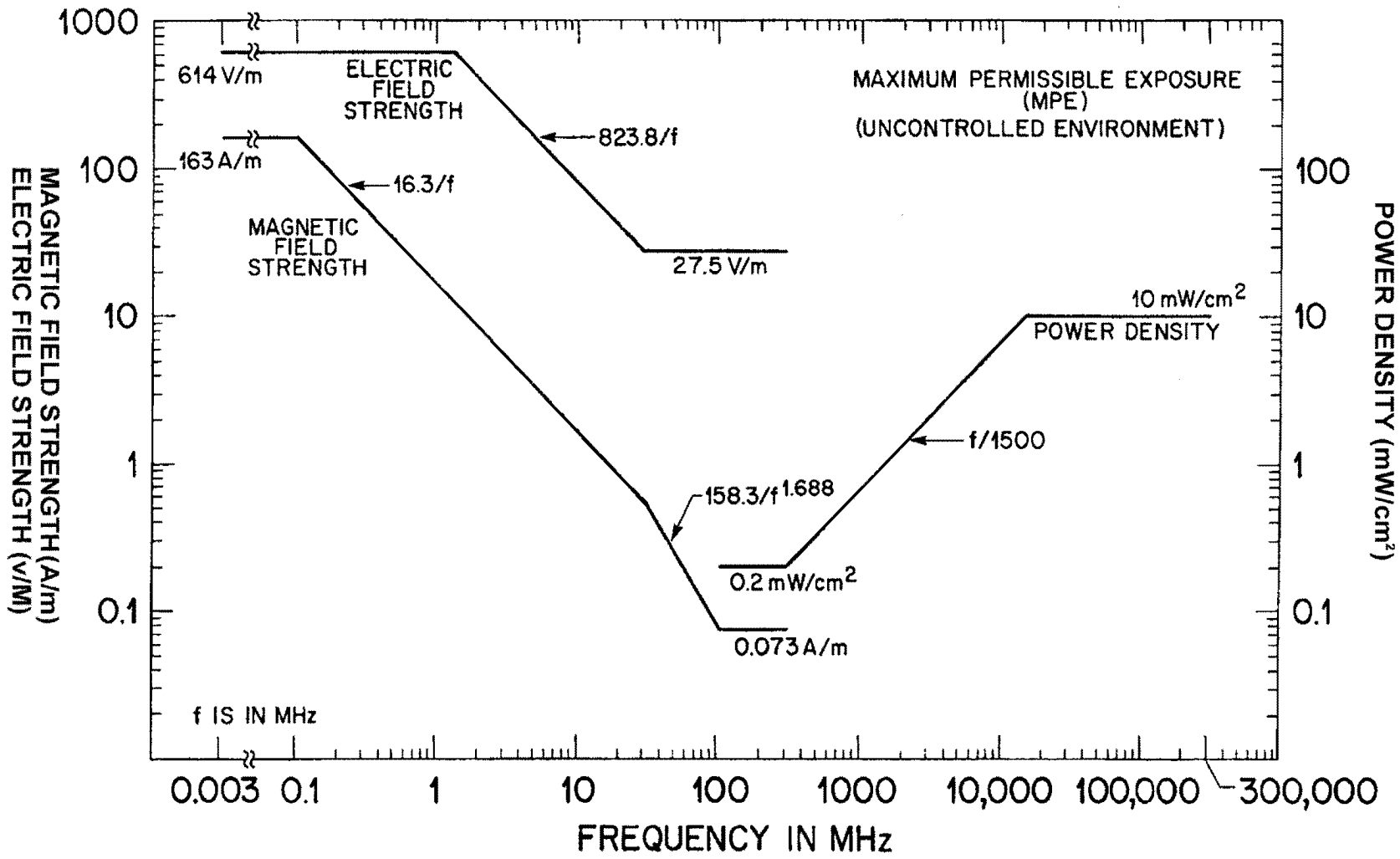

FIGURE C-2. Graphic Representation of Permissible Exposure Limits in Terms of Fields and Power Densityfor an Uncontrolled Environment

Reproduced with permission of IEEE.

C-3. THERMAL EFFECTS

The heat produced by RF radiation may adversely affect live tissue. If the body cannot dissipate this heat energy as fast as it is produced, the internal temperature of the body will rise. Under extreme RF exposure conditions, this may result in damage to the tissue and possible death.

The depth of penetration and coincident heating effects of RF energy on the human tissue are frequency dependent. A transition region exists between 1 and 3 GHz. Below 1 GHz, the RF energy penetrates to the deep body tissues; above 3 GHz, the heating effect occurs closer to the surface. At the higher frequencies, the body has an inherent warning system in the sensory elements located in the skin. At RF frequencies between 1 and 3 GHz, the thermal effects are subjected to varying degrees of penetration.

The body's ability to dissipate heat successfully depends upon many related factors, such as environmental air circulation rate, clothing, RF power density, and duration of exposure (time). Temperature regulation in the human body is accomplished primarily through the action of sweat glands (cooling through evaporation) and by heat exchange resulting from peripheral circulation of blood.

If RF exposure is not prolonged and within the time exposure limits specified in DODINST 6055.11, the internal core temperature of the body will remain normal. Where areas of the body are cooled by an adequate flow of blood through the vascular system, there is less likelihood of tissue damage resulting from abnormal temperatures.

C-4. NONTHERMAL EFFECTS

References are sometimes made to nonthermal biological effects of EMR. This means that the observed effect was not related to the biological heating of tissues.

The guidelines and limits stipulated in DODINST 6055.11 are based on short-term thermal effects. The various technical and health experts who contributed towards the development of these guidelines and limits have concluded that no reliable scientific data exist that support nonthermal (other than shock) EMR effects. In addition, no verified reports exist of injury or adverse effects on the health of humans who have been exposed to electromagnetic fields within the limits of frequency and SAR specified in DODINST 6055.11.

C-5. TIME-AVERAGED EXPOSURE

For controlled environments, personnel exposure levels higher than those shown in table C-1 are permitted if the average exposure, over a 6-minute time interval, does not exceed PEL. This is true for frequencies from 0.003 MHz to 15 GHz (15000 MHz). For frequencies above 15 GHz, the averaging time interval is frequency dependent. Similarly, in uncontrolled environments, averaging time varies by frequency, as shown in table C-3.

The following example, representative of a common workplace safety concern, is provided to help understand the concept of time-averaged RF exposure limits, as well as the method by which such limits are calculated.

A worker wishes to conduct maintenance in an area close to a transmitting antenna. The radiated power density in the desired work area has been surveyed (measured) and found to exceed PEL by a factor of two. The transmitter cannot be silenced, nor can the transmitted power be reduced. Given the following conditions, determine if maintenance personnel can safely enter the area and, if so, for how long.

TX Frequency is 200 MHz
TX Power Density (TXPD) is 2 mW/cm^2
PEL at 200 MHz is 1 mW/cm^2
Time Average Interval (TAI) is 6 Min

Calculated Time Averaging Factor (TAF) = PEL/TXPD
TAF = (1 mW/cm^2)/(2 mW/cm^2) = 0.5
Calculated new Time Average Interval (TAI')
TAI' = TAF*TAF or (6)*(0.5), which equals 3 Min

Based upon the above calculation, workers are permitted to conduct maintenance operations in the RF hazard area for 3 minutes, after which they must leave the area for a minimum of 3 additional minutes before returning.

This page left intentionally blank

APPENDIX D

CALCULATIONS AND MEASUREMENTS OF ELECTROMAGNETIC FIELDS

SECTION I. CALCULATIONS OF POWER DENSITY IN ELECTROMAGNETIC FIELDS

D-1. INTRODUCTION

D-1.1 Section I discusses the electromagnetic environment and calculations of power density in an electromagnetic field. This is followed by an introduction to calculation aids, and various tables and examples that can be used in the prediction of radio-frequency (RF) radiation hazards.

D-1.2 Electromagnetic radiation (EMR) is the emission of energy from a source in the form of an electromagnetic wave. EMR is not visible nor is it detected reliably by any biological response. EMR intensity must be measured by instruments or approximated by calculation. This section provides procedures and tabular material which aid in calculating the power density radiated from large-aperture antennas.

D-1.3 These computations enable the supervisor or any other designated personnel to derive power density as power flow per unit area expressed in milliwatts per square centimeter (mW/ cm^2). From these calculations, safe distances can be determined to reduce the possibilities of personnel exposure to excessive EMR or accidental ignition of ordnance materials or fuels.

D-1.4 Calculations may be conducted in either the metric or English system of units as long as consistency is maintained. Both centimeters (cm) and meters are commonly used to calculate power density in mW/cm^2 or watts per square meter (W/m^2). The correction factor graphs are presented with distance in wavelengths, which gives a dimensionless number that can be used with all units. Units shown in examples are selected as typical applications.

D-2. THE ELECTROMAGNETIC ENVIRONMENT

D-2.1 The spatial regions of radiation associated with any arbitrary antenna are known as the near-field region (which generally contains two subregions: the static near-field region and induction, or radiating, near-field region) and the far-field region (or radiation region). For aperture antennas, the near-field and far-field regions are also known as the Fresnel and Fraunhofer regions, respectively, because the Scalar Diffraction Theory is used to determine the fields generated from these antennas. There is also a third region of radiation, the intermediate region, which is a region of transition between the near- and far-field regions. The fields in the intermediate region are generally complex and are, therefore, difficult to determine. However, the spatial extent of the intermediate radiation region is generally small compared to the extent of the near- and far-field regions; therefore, the intermediate region is generally ignored in determining electromagnetic field quantities, or it is included as part of the near field.

The far-fi\eld region of an antenna is traditionally defined as the region around an antenna where the phase front of a spherical electromagnetic wave over a planar aperture does not exceed $\pi/8$ radians (22.5º). The far-field region begins at a distance from the antenna given by the Friis Free-Space Transmission Formula:

$$r \geq \frac{2L^2}{\lambda}$$

where λ is the wavelength of the radiation. For wire, monopole, and dipole antennas, L is taken as the electrical length of the antenna (e.g., for a monopole or a half-wavelength dipole antenna, $L = \lambda/2$). For an aperture antenna, L is generally taken as the largest linear dimension of the aperture.

In the far-field region of the antenna, the magnitudes of the electric and magnetic fields vary inversely with the distance from the antenna ($E, H \propto 1/r$). Furthermore, the ratio of the electric field magnitude to the magnetic field magnitude (E/H), also called the wave impedance, has a constant value of 377 ohms (Ω).

Because of the inverse relation between the electric/magnetic field magnitudes and the distance from the antenna, the power radiated from the antenna can be envisioned as being distributed over a spherical shell at that distance such that:

$$S = \frac{GP}{4\pi r^2}$$

where:

S = power density of the radiation (in W/m^2 or mW/cm^2),
P = total power transmitted from the antenna [in watts (W) or milliwatts (mW)],
G = far-field gain (power ratio) of the antenna, and
r = distance from the antenna (meters or cm).

The gain, G, is generally known for an antenna since the parameter is specified in the documentation provided by the antenna manufacturer or calibration lab. However, if the gain of an antenna is not known, it can be calculated to an acceptable degree of accuracy by the following, provided the antenna azimuth and elevation beamwidths are known or measured:

$$G \approx \frac{4\pi}{\phi_{az}\theta_{el}}$$

where:

ϕ_{az} = azimuth angle beamwidth, in radians,

θ_{el} = elevation angle beamwidth, in radians, and

1 radian = $\frac{180°}{\pi}$.

From the gain and radiation wavelength, another useful quantity, the effective area of the antenna (the area of the antenna beam-forming surface), A_e, can be calculated:

$$A_e = \frac{G\lambda^2}{4\pi}.$$

In the real world, measurements of radiation from an emitting antenna source are conducted using another antenna with its own characteristics. If A_{er} and G_r are the effective area and gain of the measurement antenna, respectively, then we expect the total power P_r received by the measurement antenna to be:

$$P_r = SA_{er} = \frac{G_t P_t}{4\pi r^2} \cdot \left(\frac{G_r \lambda^2}{4\pi} \right)$$

or

$$P_r = \frac{G_t G_r P_t \lambda^2}{(4\pi r)^2}$$

where:

G_t = gain of the transmitting antenna, and

P_t = total power transmitted from transmitting antenna.

Therefore, alternatively:

$$S = \frac{P_r}{A_{er}} = \frac{4\pi P_r}{G_r \lambda^2}.$$

Again, S can be expressed in mW/cm^2 or W/m^2.

With the power density S known, it becomes a relatively simple matter (in the far field) to determine the magnitudes of the electric and magnetic fields. The power density, electric field, and magnetic field are related by:

$$S = EH\sin\alpha,$$

where:

α = angle between the electric and magnetic field amplitude directions.

Since, in the far field, EMR propagates as a transverse wave (α=90º or π/2 radians), and since the magnetic and electric fields are related to each other by the wave impedance, we have:

$$S = \frac{E^2}{Z} W/m^2$$

or

$$S = ZH^2 \ W/m^2$$

where:

E = electric field intensity in volts per meter,
H = magnetic field intensity in amperes per meter, and
Z = wave impedance = 377Ω.

Note that 1 W/m^2 = 0.1 mW/cm^2.

D-2.2 In the near-field region of an antenna (also known as the Fresnel region for aperture antennas), determination of electromagnetic field characteristics is more complicated. The electric and magnetic fields are generally dependent on the source of the radiation and can vary with both angular position and distance around an antenna. Furthermore, the wave impedance of the radiation is no longer a constant value, as it was in the far-field (Fraunhofer) region. In general, a source antenna that has a high terminal voltage, high impedance, and low driver current will generate a high electric field in the near field which varies as $1/r^3$ (r being, once again, the distance between the antenna and measurement point), while the magnetic field varies as $1/r^2$; the wave impedance of such an antenna will be much greater than 377Ω, on the order of thousands of ohms. However, a source antenna that has low terminal voltage, low impedance, and high driver current will generate a higher magnetic field in the near-field region which varies as $1/r^3$, while the electric field varies as $1/r^2$. The wave impedance of an antenna where the magnetic field is the dominant radiation component will typically be one to two orders of magnitude below the far-field wave impedance. Note that, as the distance from an antenna is increased, the variation of the electric and magnetic fields with distance will approach the characteristic 1/r dependence associated with the far-field region. Furthermore, as distance from the antenna is increased, the wave impedance will asymptotically approach the constant value of 377Ω.

Because the antenna gain and beamwidth are degraded in the near-field region, the power density will be modified such that:

$$S = \frac{GP}{4\pi r^2} \cdot N$$

where N is the near-field correction factor, and G, P, and r are as previously defined.

Again, since we are making measurements in the real world, the possibility exists that fields from a radiating source could be measured in the near-field region of the receiving antenna used for the measurements. Therefore, a correction factor for the measurement antenna may have to be used such that:

$$P_r = SA_{er} = \frac{G_t G_r P_t \lambda^2}{(4\pi r)^2} N_t \cdot N_r$$

or

$$S = \frac{P_r}{A_{er}} = \frac{4\pi P_r}{N_r G_r \lambda^2}$$

where:

N_t = near-field correction factor for the source antenna, and

N_r = near-field correction factor for the measurement antenna.

The other parameters in the above equations are as previously defined.

The near-field correction factor, N, is dependent on several parameters, namely:

a. Mismatch (Voltage Standing Wave Ratio) loss derived from the reflection at the antenna feed port because of impedance mismatch.

b. RF losses between the antenna and the antenna feed point or measurement point.

c. Spillover loss, which takes into account energy spillover beyond the edge of a reflector antenna into the backlobes of the antenna.

d. Illumination efficiency, which is the ratio of the directivity of an antenna to the directivity of a uniformly illuminated antenna of the same aperture size.

e. Phase error loss, or loss resulting from the fact that the antenna aperture is not a uniform phase surface.

Parameters *a*. and *b.* above are generally applicable to all antennas and are usually determined by measurement. Parameter *c.* is applicable to reflector antennas and is also usually determined by measurement. Parameters *d*. and *e*. are generally applicable to aperture antennas and can be calculated, to a reasonable approximation, using the methods outlined in the following paragraphs.

D-2.3 For aperture antennas, the near-field correction factor depends on the type of antenna illumination and the distance from the antenna. If the antenna illumination is unknown, it can be estimated by the following formulas.

D-2.4 After calculating R, as shown in figure D-1, the illumination can be estimated from tables D-1 and D-2. This estimate is then checked by calculating the antenna efficiency. Illuminations above $\cos^4$ or $(1-r^2)^4$ are purposely omitted since the gain reduction in the Fresnel region would be almost negligible.

$R = 5.84 \times 10^{-5}(f)(BW)$ (L or D in meters),
$R = 5.84 \times 10^{-7}(f)(BW)$ (L or D in cm), or
$R = 1.78 \times 10^{-7}(f)(BW)$ (L or D in feet),

where:

R = constant for estimating illumination,

f = frequency in megahertz (MHz),

BW = beamwidth in degrees (horizontal or vertical) at 3 dB points,

L = horizontal or vertical dimension of a rectangular aperture antenna, and

D = diameter of a circular aperture antenna.

Figure D-1. Calculation of Antenna Illumination Constant

Table D-1. Rectangular Apertures

LIMITS OF R	ESTIMATED ILLUMINATION	F_h or F_v
0.88 to 1.20	uniform	1.000
1.20 to 1.45	cos	0.810
1.45 to 1.66	$\cos^2$	0.667
1.66 to 1.93	$\cos^3$	0.575
1.93 to 2.03	$\cos^4$	0.515

NOTE:

$F = F_h \cdot F_v$

Table D-2. Circular Apertures with $(1\text{-}r^2)^\rho$ Illumination

LIMITS OF R	ESTIMATED ILLUMINATION	F
1.02 to 1.27	uniform	1.00
1.27 to 1.47	$(1\text{-}r^2)$ Taper	0.75
1.47 to 1.65	$(1\text{-}r^2)^2$ Taper	0.56
1.65 to 1.81	$(1\text{-}r^2)^3$ Taper	0.44
>1.81	$(1\text{-}r^2)^4$ Taper	0.36

D-2.5 When the constant (R) is found to be borderline between two orders of illumination, the higher order should be checked for antenna efficiency first, because the power density in the

Fresnel region will be greater and, therefore, more hazardous to personnel. If the choice of the higher illumination causes the efficiency to be too high, then the next lower order can be tried. The antenna efficiency can be checked by the equation:

$$K = \frac{G(\lambda)^2}{4\pi(A)F}$$

where:

K = antenna efficiency,
A = antenna aperture area (same units as λ), and
F = factor depending on antenna illumination.

The numerical factor (F) is tabulated in tables D-1 and D-2 adjacent to the type of antenna illumination. An efficiency (K) within the limits of 0.0017 to 1.0 is reasonable.

D-3. CALCULATION OF THE ON-AXIS POWER DENSITY FROM LARGE-APERTURE ANTENNAS IN THE FRESNEL REGION

D-3.1 RECTANGULAR ANTENNAS. After the illumination has been determined, the Fresnel gain correction factors for both the horizontal and vertical planes can be found using the appropriate aperture dimension. Graphic curves of gain versus distance have been provided for finding the gain correction factors within the Fresnel region of antennas, depending on the type of illumination of the antenna. Graphs showing uniform, cos, $\cos^2$, $\cos^3$, and $\cos^4$ illumination are given by figures D-2 through D-6. On each of these graphs, the abscissa is the distance from the antenna in wavelengths, and the ordinate is the gain reduction in decibels (dB) within the Fresnel region. The aperture dimension, L, on the graphs is in wavelengths. The Fresnel gain is always less than the far-field gain and is determined by subtracting the appropriate gain reduction for both horizontal and vertical planes from the far-field gain. Therefore, by the use of this reduced gain in the far-field equation, the power density in the Fresnel region can be calculated.

D-3.2 CIRCULAR ANTENNAS. After the illumination has been determined, the Fresnel region power density can be determined by calculating the far-field distance ($d=2D^2/\lambda$ meters), calculating the power density at this point by the Friis Free-Space Transmission Formula:

$$PD = \frac{PG}{4\pi(d)^2}$$

and by multiplying this power density by the gain correction factor given in figure D-7 for the desired distance (d) and antenna illumination.

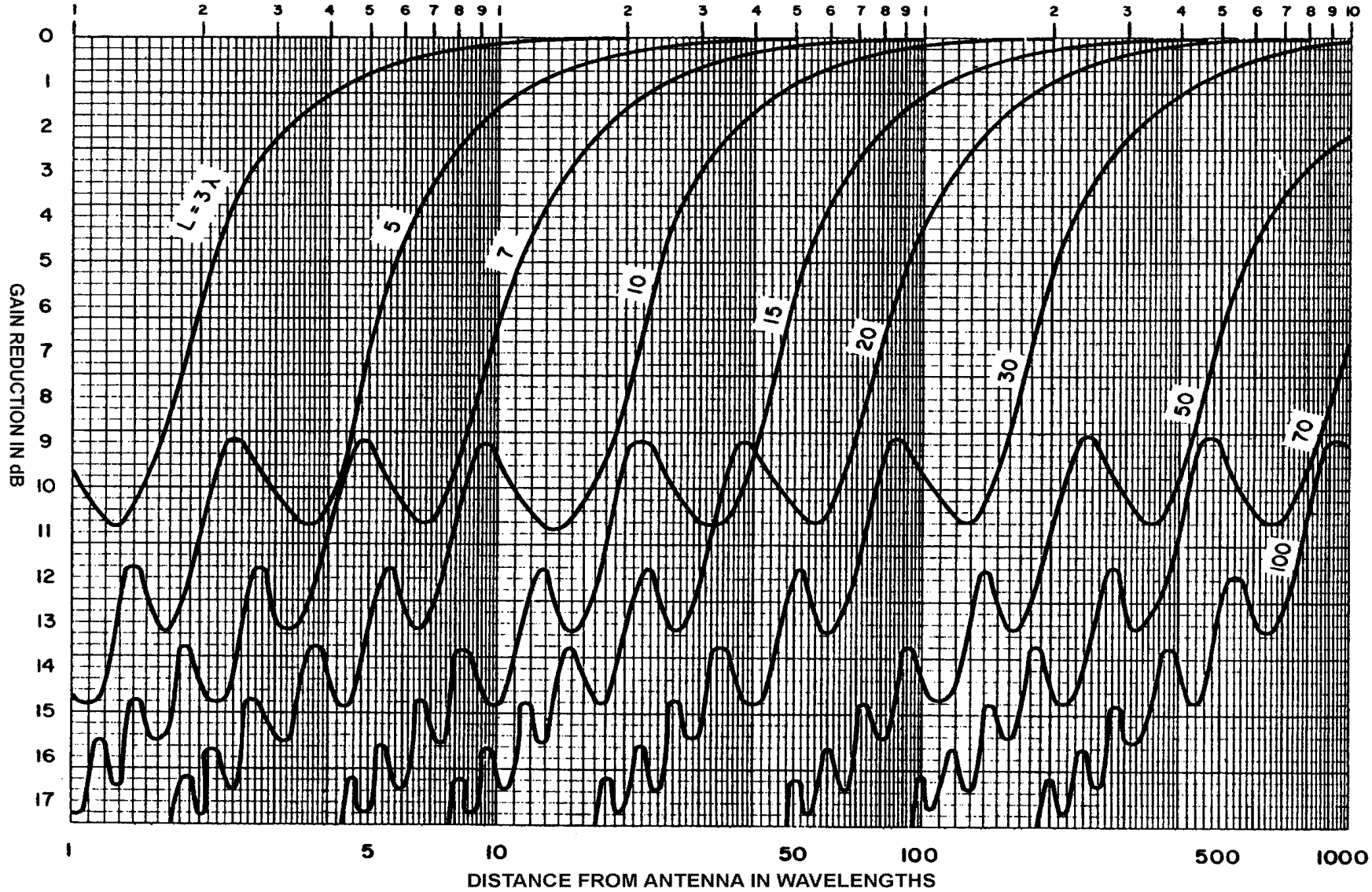

Figure D-2. Fresnel Region Gain Correction for Uniform Illumination (Rectangular Aperture)

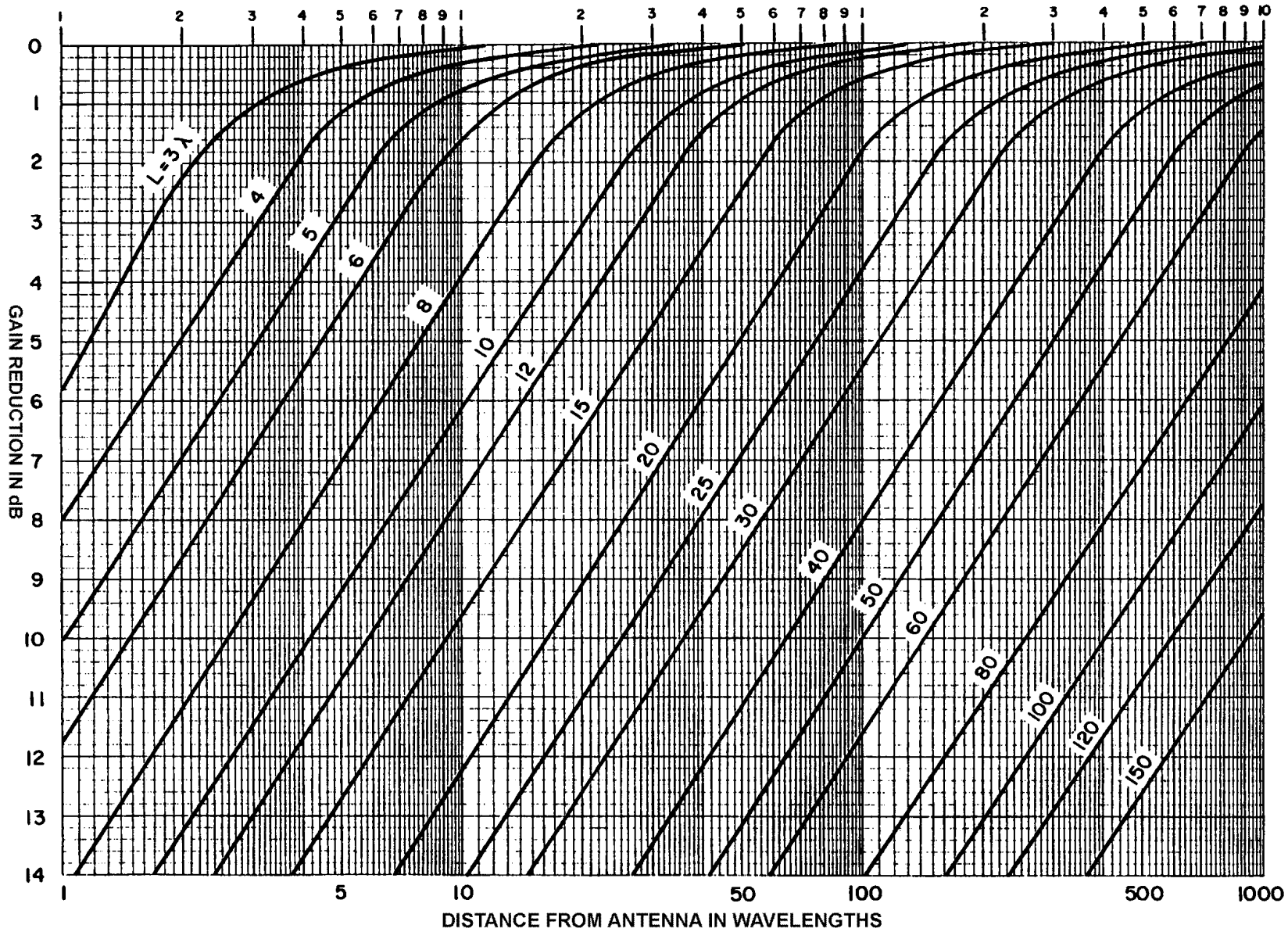

Figure D-3. Fresnel Region Gain Correction for Cosine Illumination (Rectangular Aperture)

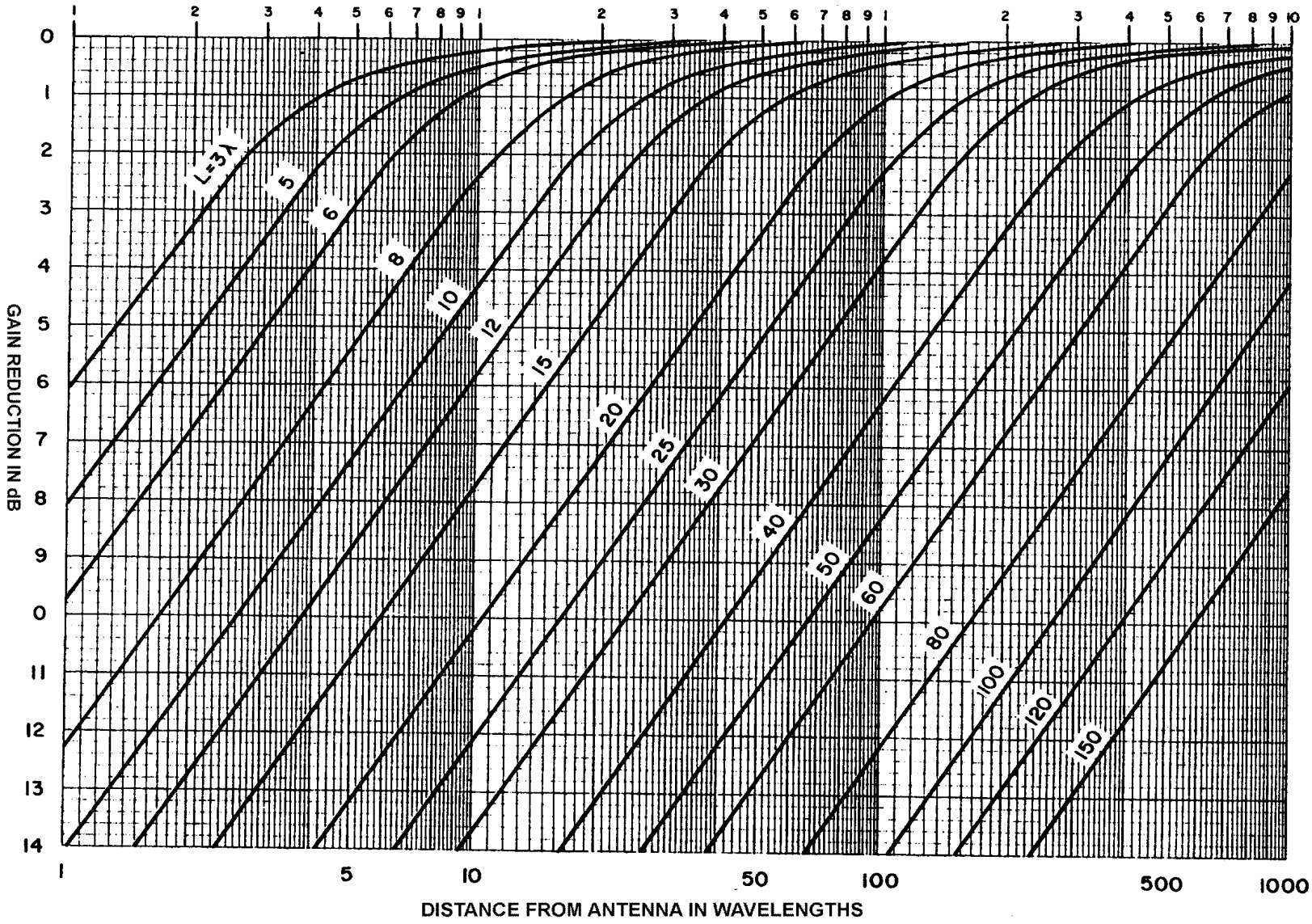

Figure D-4. Fresnel Region Gain Correction for Cosine Square Illumination (Rectangular Aperture)

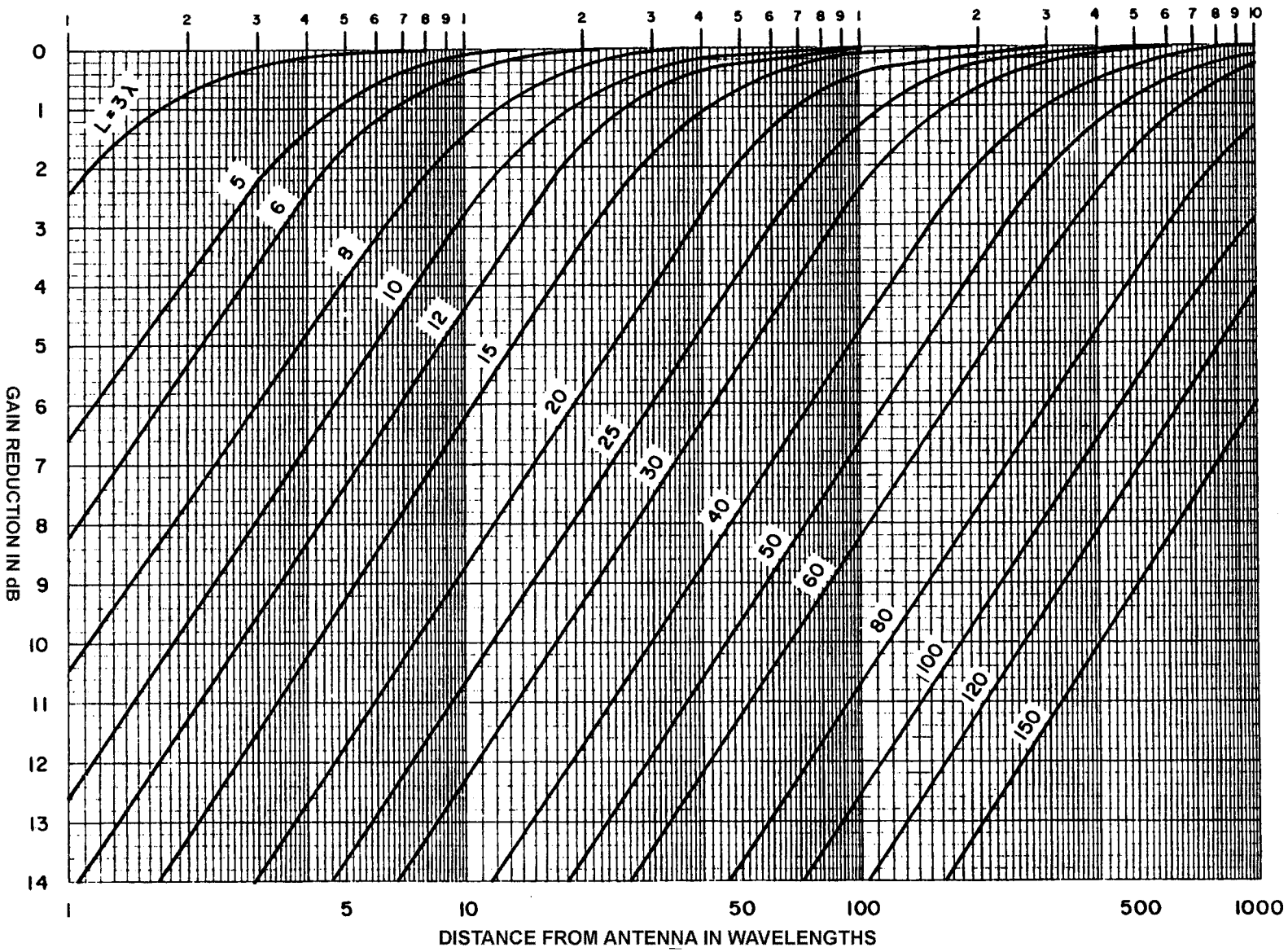

Figure D-5. Fresnel Region Gain Correction for Cosine Cubed Illumination (Rectangular Aperture)

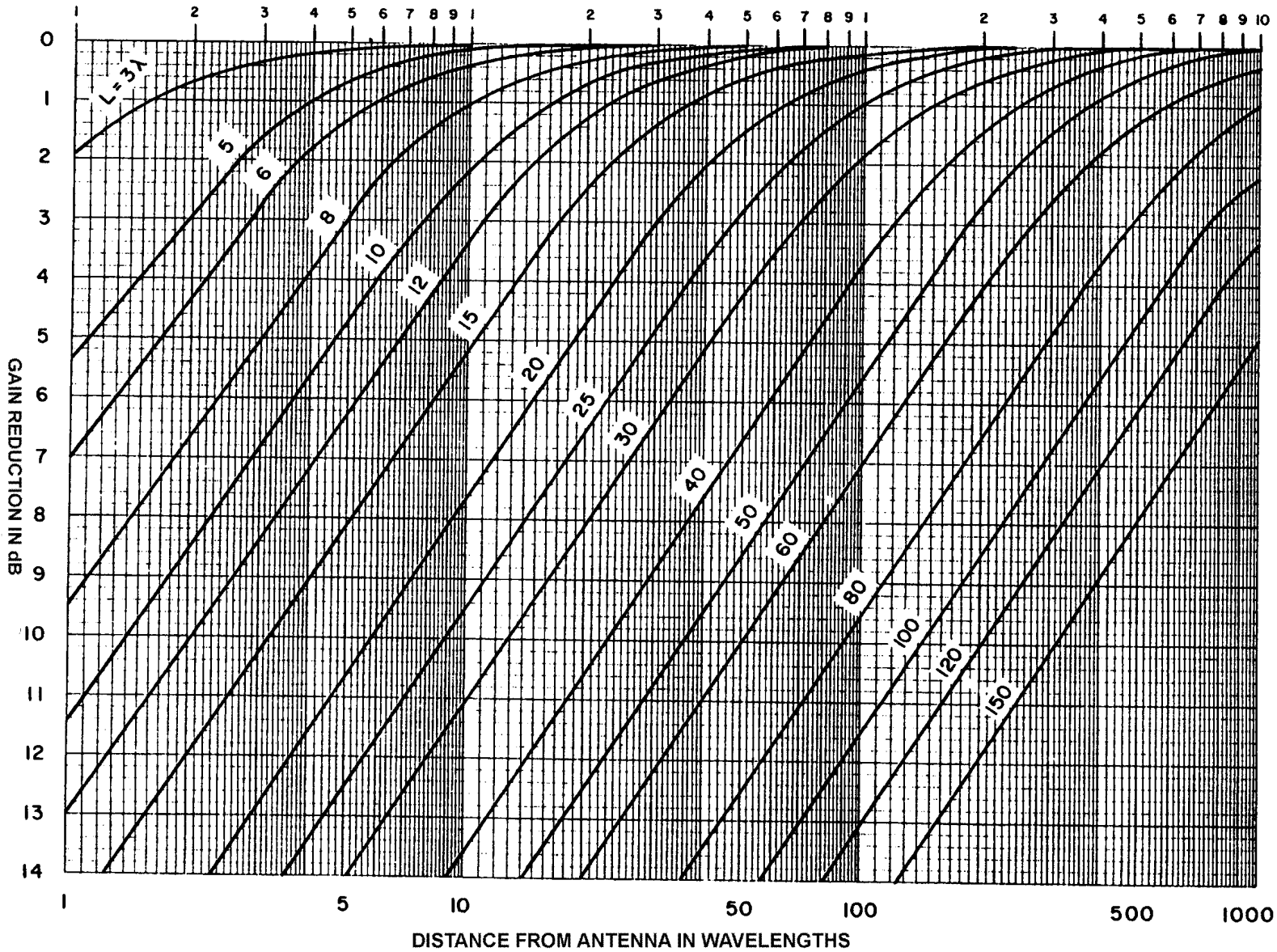

Figure D-6. Fresnel Region Gain Correction for Cosine Fourth Illumination (Rectangular Aperture)

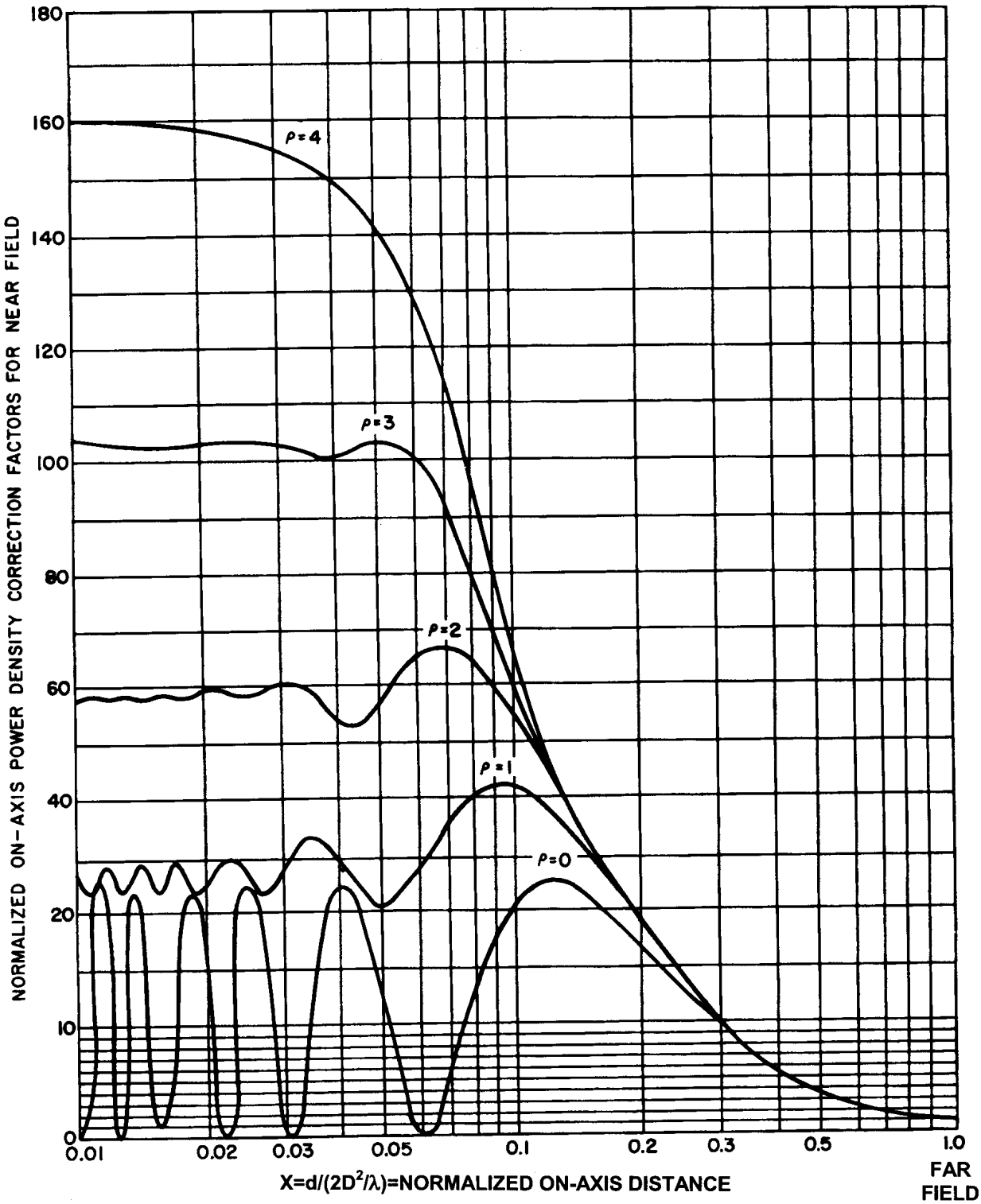

Figure D-7. Normalized On-Axis Power Density Curves Circular Aperture $(1-r^2)^{\rho}$

D-4. CALCULATION OF POWER DENSITY OF SIDELOBES

Under certain circumstances, it may be necessary to calculate the power density at a location to the side of a radar antenna main beam. If the antenna in question does not have its aperture distribution defined in its fundamental characteristics, the aperture distribution parameters can be established by using tables D-3 and D-4. Table D-3 defines the directivity patterns for circular aperture from $(1\text{-}r^2)^0$ through $(1\text{-}r^2)^2$ illumination, while table D-4 defines the directivity patterns of rectangular aperture from uniform through $\cos^2$ illumination. Because the sidelobe is less than the main beam, the power density is given as:

$$PD = \frac{PG}{4\pi(d)^2}(SL),$$

where:

SL = gain degradation of the first sidelobes.

The angular displacement in degrees of the first sidelobes is also listed in tables D-3 and D-4.

Table D-3. Circular Aperture Distribution

TYPE OF ILLUMINATION	HALF-POWER BEAMWIDTH IN DEGREES	ANGULAR DISPLACEMENT TO FIRST ZERO IN DEGREES	INTENSITY OF FIRST SIDELOBE DB BELOW MAXIMUM	ANGULAR DISPLACEMENT TO FIRST SIDELOBE IN DEGREES
$(1-r^2)^0$	$58.9\frac{\lambda}{D}$	$69.8\frac{\lambda}{D}$	17.6	$97.4\frac{\lambda}{D}$
$(1-r^2)^1$	$72.7\frac{\lambda}{D}$	$93.6\frac{\lambda}{D}$	24.6	$119.8\frac{\lambda}{D}$
$(1-r^2)^2$	$84.3\frac{\lambda}{D}$	$116.2\frac{\lambda}{D}$	30.6	$139.3\frac{\lambda}{D}$

NOTE: D = Aperture diameter in the same units as λ.

Table D-4. Rectangular Aperture Distribution

TYPE OF ILLUMINATION	HALF-POWER BEAMWIDTH IN DEGREES	ANGULAR DISPLACEMENT TO FIRST ZERO IN DEGREES	INTENSITY OF FIRST SIDELOBE DB BELOW MAXIMUM	ANGULAR DISPLACEMENT TO FIRST SIDELOBE IN DEGREES
Uniform	$50.8\frac{\lambda}{L}$	$57.3\frac{\lambda}{L}$	13.2	$83.8\frac{\lambda}{L}$
Cosine	$68.8\frac{\lambda}{L}$	$85.9\frac{\lambda}{L}$	23	$113.5\frac{\lambda}{L}$
Cosine Squared	$83.2\frac{\lambda}{L}$	$114.6\frac{\lambda}{L}$	32	$137.3\frac{\lambda}{L}$

NOTE: L = Vertical or horizontal length of aperture in the same units as λ.

D-5. SAMPLE ON-AXIS POWER DENSITY COMPUTATION

D-5.1 For rectangular aperture antennas, the preceding procedures are illustrated by the calculation of near-field power density of an imaginary AN/SPS-00 radar as shown in figure D-8. For circular aperture antennas, the calculation of near-field power density is illustrated in figure D-9 for a hypothetical antenna with a circular aperture.

D-5.2 For rectangular aperture antennas, the near-field gain correction factor (N) is the sum of the vertical and horizontal gain correction factors in dB. These factors are derived from the graphs in figures D-2 through D-6, which show the near-field gain correction in dB as a function of the antenna dimension (either vertical or horizontal) in wavelengths and the distance (d) from the antenna in wavelengths. For circular aperture antennas, the near-field numerical gain correction factors are derived from the graph in figure D-7.

D-6. DETERMINING THE HAZARD FROM A ROTATING BEAM

D-6.1 Although the on-axis power density of a radar beam may exceed the PELs specified in tables C-1 and C-3, there may be no hazard if the beam is being rotated or scanned. Duration of exposure, as well as power density, is a factor in determining the RF hazard. The time factor is recognized by specifying the PEL in two ways: for example, 10 mW/cm^2 for continuous exposure, and 1 mW-hr/cm^2 in any given 0.1-hour interval. Since a continuous 10 mW/cm^2 for 0.1 hour produces energy of 1 mW-hr/cm^2, these limits are identical for the case of continuous exposure. The latter limit, though, expresses the fact that higher power densities up to 100 mW/cm^2 are permissible for intermittent exposure. To illustrate the use of this criterion for a rotating antenna, assume the following radiation characteristics:

Maximum power density on axis	50 mW/cm^2
Beamwidth	10 degrees
Rotation speed	6 rpm

1. The assumed characteristics of the AN/SPS-00 antennas are as follows:

   a. Antenna width = 0.991 meters (3.25 ft) = 29λ

   b. Antenna height = 0.177 meters (0.58 ft) = 5.2λ

   c. Gain (far-field) = 29.3 dB = 851 gain ratio

   d. Center frequency = 8825 MHz

   e. Beamwidth = 3.0° horizontal and 13° vertical

   f. Power = 13.1 W (average power at 0.5 μsec pulse width)

   g. $\lambda = \frac{300}{8825} = 0.034$ meter (0.11 ft)

   h. Far field $\frac{2L^2}{\lambda}$ where L is the longest linear dimension of antenna (meters)

   $\frac{2(0.991)^2}{0.034} = 57.8$ meters.

   i. R, the constant for estimating illumination, is found by:

   $R = 5.84 \times 10^{-5}(f)(BW)$ (L in meters)

Where:

f = frequency in MHz,

BW = beamwidth in degrees (horizontal or vertical) at 3 dB points, and

L = horizontal or vertical dimension in meters (feet).

For horizontal illumination:

$$R = 5.84 \times 10^{-5}(8825)(3.0)(0.991)$$

$R = 1.53$ - estimated illumination is $\cos^2$ (from table D-1).

For vertical illumination:

$$R = 5.84 \times 10^{-5}(8825)(13)(0.177)$$

$R = 1.19$ - estimated illumination is uniform (from table D-1).

Figure D-8. Sample On-Axis Power Density Computation for a Rectangular Aperture Antenna (Sheet 1)

2. Antenna efficiency (K) is checked by using values from table D-1 of:

$$F_h = 0.667 \text{ and } F_v = 1.0$$

$$F = F_h \times F_v = 0.667$$

$$K = \frac{G(\lambda)^2}{4\pi(A)F} = \frac{851(0.034)^2}{4(3.14)(0.991)(0.177)(0.667)}$$

$K = 0.67$ verifying estimated illuminations.

3. N is the sum of the horizontal and vertical correction factors obtained from figure D-4 for cos² and figure D-2 for uniform illumination. At 1 meter (3.28 ft) or 29λ, the horizontal gain reduction is approximately 9.0 dB; the vertical gain reduction at 1 meter is 0.1 dB.

Therefore,

$$N(dB) = (-9.0dB) + (-0.1dB)$$
$$= -9.1dB.$$

$$N(ratio) = \text{antilog } (-0.91) = \frac{1}{8.1}.$$

$$PD \text{ at 1 meter} = \frac{PG}{4\pi(d)^2}(N)$$
$$= \frac{13.1(851)}{12.56(1)^2} \times \frac{1}{8.1}$$
$$= 109\ W/m^2$$
$$= 109\ W/m^2$$
$$= 109\ mW/cm^2.$$

Figure D-8. Sample On-Axis Power Density Computation for a Rectangular Aperture Antenna (Sheet 2)

1. The assumed characteristics of a hypothetical circular aperture antenna are as follows:

   a. Aperture diameter (D) = 2 meters

   b. Gain (far-field) (G) = 21 dB = 126 (numerical gain)

   c. Center frequency (f) = 5000 MHz

   d. Beamwidth = 3°

   e. Power (P) = 50 W (average)

   f. Wavelength (λ) = $\frac{300}{f} = 0.06$ meters

   g. Far-field distance = $\frac{2D^2}{\lambda} = 133.33$ meters

   h. Antenna illumination constant (R) = $5.84 \times 10^{-5}(f)(beamwidth)(D)$

$$= 5.84 \times 10^{-5}(5000)(3)(2)$$

$$= 1.752\,.$$

   i. Using table D-2, the value of R, 1.752, indicates a circular aperture antenna with an estimated $(1\text{-}r^2)^3$ taper illumination. The corresponding antenna illumination factor (F), also from table D-2, is equal to 0.44.

2. Antenna efficiency (K) = $\frac{G\lambda^2}{4\pi AF}$

$$= \frac{126(0.06)^2}{4\pi(\pi D^2/4)(0.44)}$$

$$= \frac{126(0.0036)}{\pi^2(2)^2(0.44)}$$

$$= 0.026\,.$$

Figure D-9. Sample On-Axis Power Density Computation for a Circular Aperture Antenna (Sheet 1)

3. N is the circular aperture gain correction obtained from figure D-7. Since our hypothetical antenna was found to have a $(1-r^2)^3$ taper illumination, the curve specified for ρ=3 would be applicable. Therefore, the power density at a point 5 meters away from the antenna would be as follows:

   a. With d=5m, the normalized distance (with respect to the far-field distance) X is calculated as:

$$X = d/\left(\frac{2D^2}{\lambda}\right) = \frac{5}{133.3} = 0.0375.$$

   b. From figure D-7, N is found to have a value of 100 for the ρ=3 curve at X=0.0375.

   c. Therefore, at a distance of 5 meters, the power density is given by:

$$PD = N \text{ (PD at far - field distance)}$$
$$= N \bullet \frac{GP}{4\pi(2D^2/\lambda)^2}$$
$$= \frac{(100)(126)(50)}{4\pi(133.3)^2}$$
$$= 2.82\ W/m^2 \text{ or } 0.282\ mW/cm^2.$$

Figure D-9. Sample On-Axis Power Density Computation for a Circular Aperture Antenna (Sheet 2)

D-6.2 If this antenna was not rotating while transmitting, the permissible exposure time in a continuous power density of 50 mW/cm^2 is:

$$T(hr) = \frac{1}{PD(mW/cm^2)} = 0.02 \text{ hour}$$

and about 1 minute out of each 6 minutes would be permitted in the beam.

D-6.3 When the antenna is rotating at 6 rpm, it will make one revolution each 10 seconds (0.167 minute), and a point will be exposed to the beam 10/360^{ths} (beamwidth over 360°) of this period. The actual exposure time for each revolution is 0.278 second or 0.0046 minute. In 0.1 hour, there will be 36 revolutions (6 rev/min x 6 min), so that in this 6 minutes, the total exposure time is 0.167 minute. The total energy/cm^2 is thus (50 mW/cm^2)(0.167 min) (1 hr/60 min) or 0.139 mW-hr/cm^2. This is below the permissible intermittent exposure level of 1.0 mW-hr/cm^2;

thus, the radar is not hazardous as long as it is rotating, even though the on-axis power density exceeds the safe limit for continuous exposure.

D-7. DETERMINING THE HAZARD FROM A SCANNING BEAM

Power density from a scanning antenna can be approximated by a method similar to that for the rotating antenna. As a rule of thumb, the fixed-beam power density of a scanning antenna can be reduced by a factor of twice the beamwidth divided by the scan angle. That is:

$$PD(S) = \frac{2 \times BW}{SA} \times PD(F)$$

where:

PD(S) = power density while scanning,
PD(F) = fixed power density,
BW = beamwidth in degrees, and
SA = scan angle in degrees.

D-8. INTRODUCTION TO CALCULATION AIDS

The data in this paragraph includes tables and graphs which will be of assistance in the calculation of RF radiation hazards. Explanations regarding the use of the various tables are presented prior to the tables when such explanations are deemed necessary.

D-8.1 The relation between the frequency and wavelength of EMR is a relatively simple one. For radiation propagating at a frequency f and wavelength λ, we have the following relation:

$$V = \lambda f$$

where:

V = the velocity of the electromagnetic wave.

Since an electromagnetic wave's velocity is constant in free space (V = speed of light in vacuum $\approx 3 \times 10^8$ m/s), the wavelength can be calculated for any given frequency as:

$\lambda = 300/f$ meters or

$\lambda = 30000/f$ cm

where:

f = frequency in MHz.

D-8.2 TRIGONOMETRIC FUNCTIONS OF A RIGHT TRIANGLE. In the right triangle shown in figure D-10, the trigonometric functions of angle A are defined as follows:

$\sin A = a/c$,
$\cos A = b/c$, and
$\tan A = a/b$.

The following relations derived from figure D-10 may also be useful when solving problems:

$c^2 = a^2 + b^2$ (Pythagorean Theorem),
$\sin^2 A + \cos^2 A = 1$,
$\sec A = 1/(\cos A) = c/b$ (Secant Function),
$\csc A = 1/\sin A = c/a$ (Cosecant Function),
$\cot A = 1/\tan A = b/a$ Cotangent Function),
$\cos 2A = \cos^2 A - \sin^2 A$, and
$\sin 2A = 2 \sin A \cos A$.

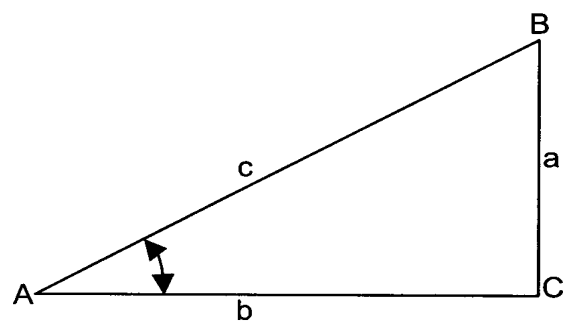

Figure D-10. Functions of a Right Triangle

D-8.3 USE OF TRIGONOMETRIC FUNCTIONS IN SOLVING PROBLEMS. Refer to figure D-11, which illustrates the use of trigonometric functions in solving problems.

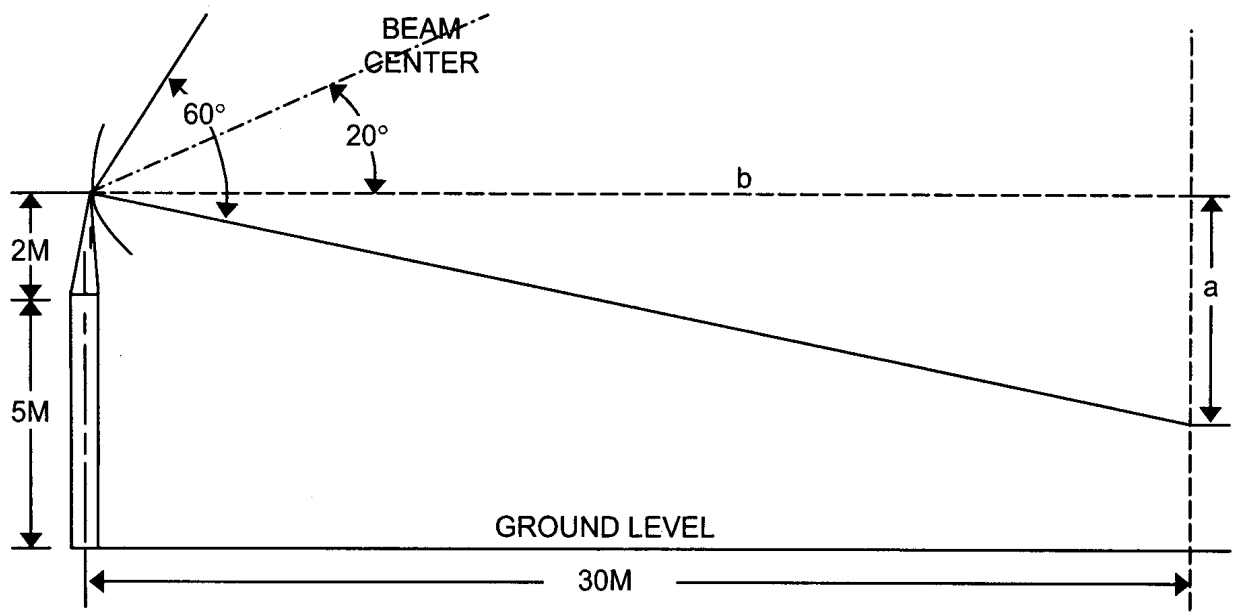

Given: As shown above, a radar set in which the antenna has a radiation pattern that covers a vertical angle of 60°, with the beam center elevated +20° from the horizontal plane. The center of the antenna is 2 meters above the base of a pedestal, which is mounted on a 5-meter tower.

To find: Whether any part of the main beam will illuminate a person who is 1.8 meters tall and who is on the ground at a distance of 30 meters.

Solution: Lower edge of beam = +20-(1/2 x 60)
= -10°

$$\tan 10^\circ = \frac{a}{b}$$

$$a = b \tan 10^\circ = 30 \times 0.1763 = 5.3 \text{ meters}$$

The center of the antenna above ground (tower + pedestal) is 7 meters (5 meters + 2 meters), and the clearance of the beam above ground at 30 meters is 7 meters - 5.3 meters, or 1.7 meters. Therefore, a 1.8-meter person would have 1.8 meters - 1.7 meters, or 0.1 meter, of his body illuminated by the radar beam.

Figure D-11. Sample Use of Trigonometric Functions for Solving Problems

D-8.4 THE DECIBEL.

D-8.4.1 The decibel is part of a larger unit called a bel. As originally used, the bel represented a power ratio of 10 to 1 between the strength of two sounds. To gain a better understanding of the bel, consider three sounds of unequal power intensity. If the power intensity of the second sound is 10 times the power intensity of the first, its power level is said to be 1 bel above that of the first. If the third sound has a power intensity which is 10 times that of the second, its level is 1 bel above that of the second. But, since the third sound is 100 times as intense as the first, its level is 2 bels above that of the first. Thus, a power ratio of 100 to 1 is represented by 2 bels; a power ratio of 1000 to 1, by 3 bels; a power ratio of 10,000 to 1, by 4 bels; etc. It is readily seen, therefore, that the concept of bels represents a logarithmic relationship, since the base 10 logarithm of 100 equals 2 (corresponding to 2 bels), the logarithm of 1000 equals 3 (corresponding to 3 bels), etc. The exact relationship is given by the formula:

$$\text{Bels} = \log \frac{P_2}{P_1}$$

where $\frac{P_2}{P_1}$ represents the power ratio.

D-8.4.2 This logarithmic characteristic of the bel makes it a very convenient means for expressing power ratios. Since the bel is a rather large unit, however, its use may prove inconvenient. Usually, therefore, a smaller unit, the dB, is used. Ten dB equals 1 bel. A 10-to-1 power ratio, which is represented by 1 bel, is also represented by 10 dB; a 100-to-1 ratio (2 bels) is represented by 20 dB; a 1000-to-1 ratio (3 bels) is represented by 30 dB, etc. The formula for bels may be rewritten to give a result in dB merely by multiplying by 10. Thus, the formula becomes:

$$dB = 10 \log \frac{P_2}{P_1}.$$

For example, assume that it is necessary to find the attenuation ratio of an RF attenuator which is to be used to measure transmitter power output. On test, it is found that 60,000 W of RF input to the attenuator produces an output of 6 mW. To find the attenuation ratio, use the equation:

$$\begin{aligned} \text{Attenuation ratio} &= \frac{P_2}{P_1} \\ &= \frac{60,000}{0.006} \\ &= 10,000,000. \end{aligned}$$

This ratio can be expressed much more conveniently in terms of dB.

$$dB = 10 \log \frac{P_2}{P_1}$$
$$= 10 \log \frac{60,000}{0.006}$$
$$= 10 \log 10,000,000$$
$$= 70\, dB.$$

In this case, the attenuation ratio is 70 dB. In other words, P_2 is said to be 70 dB up with respect to P_1. In all instances where P_2 is numerically greater than P_1, as in the above example, the final result is expressed as a positive quantity. When P_2 is smaller than P_1, the numerical result is the same, but it is expressed as a negative quantity in dB. If, for example, P_2 is .006 W and P_1 is 60,000 W, then:

$$dB = 10 \log \frac{P_2}{P_1}$$
$$= 10 \log \frac{0.006}{60,000}$$
$$= 10 \log 0.0000001$$
$$= -70.$$

In this case, P_2 is said to be 70 dB *down* with respect to P_1.

D-8.4.3 Voltage and current ratios may also be expressed in terms of dB, provided that the resistance (or impedance) remains constant. For equal resistances, the formulas are:

$$dB = 20 \log \frac{E_2}{E_1} \text{ and}$$
$$dB = 20 \log \frac{I_2}{I_1}.$$

The difference in the multiplying factor in these formulas (20 rather than 10, as in the case of power ratios) arises from the fact that power is proportional to voltage or current squared, and when a number is *squared*, the logarithm of that number is doubled. For power ratios, the dB value is 10 times the logarithm of the ratio. For voltage or current ratios, the dB value is 20 times the logarithm of the ratio.

D-8.4.4 Conversions from voltage, current, or power ratios to dB may be readily made by referring to table D-5. Conversions may also be made by means of the graph shown in figure D-12.

Table D-5. Decibel Table: Voltage, Current, and Power Ratios

MINUS ←		dB	→ PLUS	
VOLTAGE OR CURRENT RATIO (EQUAL IMPEDANCE)	POWER RATIO		VOLTAGE OR CURRENT RATIO (EQUAL IMPEDANCE)	POWER RATIO
1.00000	1.00000	0.0	1.000	1.000
0.98900	0.97700	0.1	1.012	1.023
0.97700	0.95500	0.2	1.023	1.047
0.96600	0.93300	0.3	1.035	1.072
0.95500	0.91200	0.4	1.047	1.096
0.94400	0.89100	0.5	1.059	1.122
0.93300	0.87100	0.6	1.072	1.148
0.92300	0.85100	0.7	1.084	1.175
0.91200	0.83200	0.8	1.096	1.202
0.90200	0.81300	0.9	1.109	1.230
0.89100	0.79400	1.0	1.122	1.259
0.84100	0.70800	1.5	1.189	1.413
0.79400	0.63100	2.0	1.259	1.585
0.75000	0.56200	2.5	1.334	1.778
0.70800	0.50100	3.0	1.413	1.995
0.66800	0.44700	3.5	1.496	2.239
0.63100	0.39800	4.0	1.585	2.512
0.59600	0.35500	4.5	1.679	2.818
0.56200	0.31600	5.0	1.778	3.162
0.53100	0.28200	5.5	1.884	3.548
0.50100	0.25100	6.0	1.995	3.981
0.47300	0.22400	6.5	2.113	4.467
0.44700	0.20000	7.0	2.239	5.012
0.42200	0.17800	7.5	2.371	5.623
0.39800	0.15900	8.0	2.512	6.310
0.37600	0.14100	8.5	2.661	7.079
0.35500	0.12600	9.0	2.818	7.943
0.33500	0.11200	9.5	2.985	8.913
0.31600	0.10000	10.0	3.162	10.000
0.28200	0.07940	11.0	3.550	12.600
0.25100	0.06310	12.0	3.980	15.900
0.22400	0.05010	13.0	4.470	20.000
0.20000	0.03980	14.0	5.010	25.100
0.17800	0.03160	15.0	5.620	31.600
0.15900	0.02510	16.0	6.310	39.800
0.14100	0.02000	17.0	7.080	50.100
0.12600	0.01590	18.0	7.940	63.100
0.11200	0.01260	19.0	8.910	79.400
0.10000	0.01000	20.0	10.000	100.000
0.03160	0.00100	30.0	31.600	1000.000
0.01000	0.00010	40.0	100.000	10000.000
0.00316	0.00001	50.0	316.000	100000.000

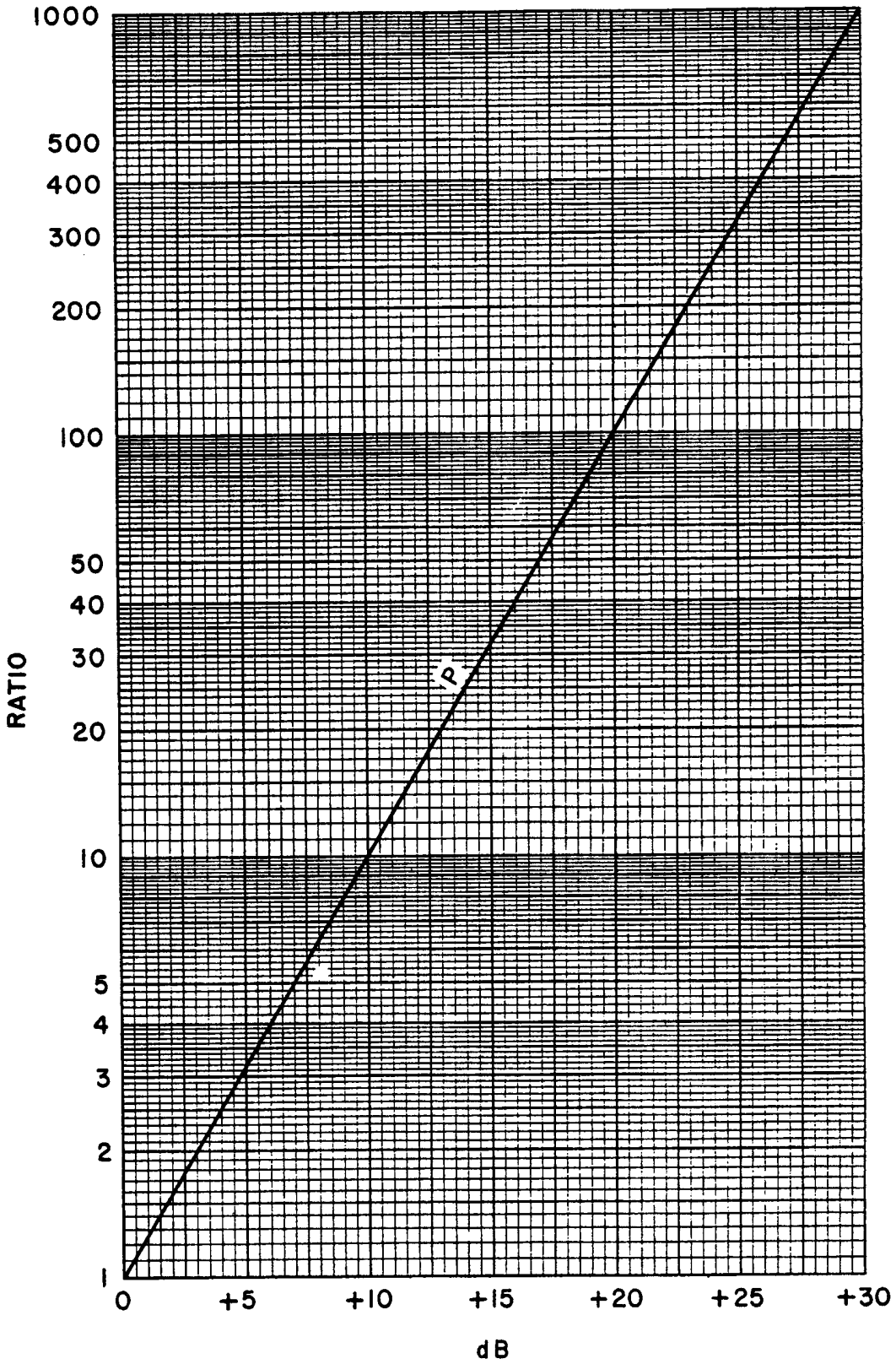

Figure D-12. Power Gain Ratio Versus Decibel Gain

D-8.5 THE DBM.

D-8.5.1 It should be clearly understood that the term *decibel* does not, in itself, indicate power, but rather a ratio of, or comparison between, two power values. It is very often desirable, however, to express a single level or quantity of power, voltage, or current in dB, as, for example, in transmission line work or in connection with the input or output of an amplifier. This can be done by using a fixed power level as a reference. The original standard reference level was 6 mW (0.006 W), but to simplify calculations, a 1-mW standard (dBm) has been adopted and will be used hereafter as the reference level. [Some manufacturers use 1 W (dBW) as a standard.]

D-8.5.2 When 1 mW is used as a reference level, the ratio is expressed in dBm's. The abbreviation *dBm* indicates dB relative to a 1-mW standard. Thus, a pulsed radar transmitter having an average power output of 100 W is said to have an average power output of 50 dBm. The conversion from power to dBm can be made as follows:

$$\text{Average power } (dBm) = 10 \log \frac{P_2}{P_1}$$

(where P_1 is the reference value of 0.001 W),

$$\text{Average power } (dBm) = 10 \log \frac{100}{0.001}$$

$$= 10 \log 100{,}000$$

$$= 50 \ dBm.$$

D-8.5.3 Conversions from power to dBm can be made more readily by means of the graph shown in figure D-13. Reasonable care should be exercised in reading the graph, using the appropriate dBm scale for power in milliwatts, watts, kilowatts, or megawatts.

D-8.6 CONVERSION OF POWER OR DBM TO MICROVOLTS ACROSS 50, 72, OR 600 OHMS.

D-8.6.1 Both the dB and the dBm are power ratios; their adaptation to voltage or current ratios is meaningful only if the impedance is the same for both values of voltage (or current) in the ratio. For example, the formula for the ratio, expressed in dB, of two voltages, E_2 and E_1, is as follows:

$$dB = 20 \log \frac{E_2}{E_1}.$$

D-8.6.2 To calculate the voltage gain of an amplifier when the input impedance differs from the output, use the following formula:

$$dB = 20 \log \frac{E_2}{E_1} + 10 \log \frac{Z_1}{Z_2}$$

where:

E_1 = input voltage,
E_2 = output voltage,
Z_1 = input impedance, and
Z_2 = output impedance.

D-8.6.3 In calculations involving power in transmission lines, it is often necessary to convert extremely small amounts of power to dBm or to convert either of these values to voltage, in microvolts, which would appear across a load impedance of 50, 72, or 600 ohms. Conversions from dBm or power in picowatts to microvolts across 50, 72, or 600 ohms, or vice versa, may be made directly by means of table D-6.

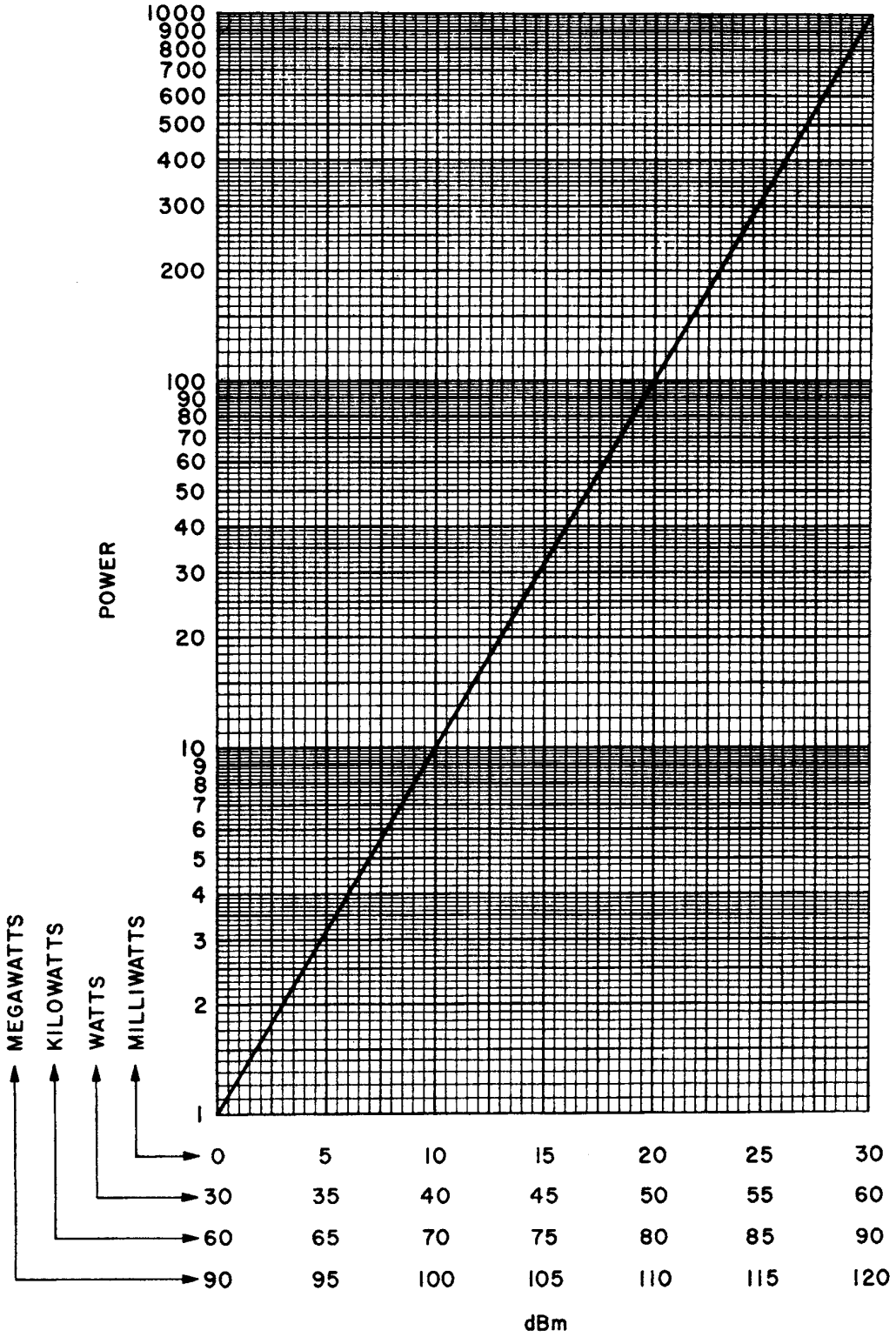

Figure D-13. Power Gain Ratio Versus dBm

Table D-6. dBm Conversion Table

dBm	MICROVOLTS ACROSS 50 OHMS	MICROVOLTS ACROSS 72 OHMS	MICROVOLTS ACROSS 600 OHMS	PICOWATTS
0	223,607.000	268,328.000	774,596.700	1,000,000,000.00000
-3	158,314.000	189,976.000	548,379.400	501,200,000.00000
-6	112,094.000	134,513.000	388,265.400	251,250,000.00000
-9	79,358.000	95,230.000	274,845.400	125,900,000.00000
-12	56,192.000	67,431.000	194,576.500	63,100,000.00000
-15	39,780.000	47,736.000	137,738.900	31,620,000.00000
-18	28,174.000	33,809.000	97,519.200	15,850,000.00000
-21	19,932.000	23,919.000	69,034.800	7,943,000.00000
-24	14,112.000	16,934.000	48,873.300	3,981,000.00000
-27	9,990.000	11,988.000	34,597.700	1,995,000.00000
-30	7,073.000	8,487.000	24,494.900	1,000,000.00000
-33	5,009.000	6,011.000	17,341.300	501,200.00000
-36	3,546.000	4,256.000	12,276.800	251,200.00000
-39	2,511.000	3,013.000	8,691.400	125,900.00000
-42	1,776.000	2,132.000	6,153.000	63,100.00000
-45	1,258.000	1,509.000	4,355.700	31,620.00000
-48	890.000	1,068.000	3,083.800	15,850.00000
-51	630.000	756.000	2,183.100	7,943.00000
-54	446.000	536.000	1,545.500	3,981.00000
-57	316.000	379.000	1,094.000	1,995.00000
-60	223.607	268.328	774.597	1,000.00000
-63	158.314	189.976	548.379	501.20000
-66	112.094	134.513	388.265	251.25000
-69	79.358	95.230	274.845	125.90000
-72	56.192	67.431	194.576	63.10000
-75	39.780	47.736	137.739	31.62000
-78	28.174	33.809	97.519	15.85000
-81	19.932	23.919	69.035	7.94300
-84	14.112	16.934	48.873	3.98100
-87	9.990	11.988	34.598	1.99500
-90	7.073	8.487	24.495	1.00000
-93	5.009	6.011	17.341	0.50120
-96	3.546	4.256	12.277	0.25120
-99	2.511	3.013	8.691	0.12590
-102	1.776	2.132	6.153	0.06310
-105	1.257	1.509	4.356	0.03162
-107	0.999	1.199	3.460	0.01995

SECTION II. MEASUREMENTS OF ELECTROMAGNETIC FIELDS

D-9. INTRODUCTION

This section provides guidance in the selection of test equipment and procedures for performing power measurements of RF energy.

D-10. INSTRUMENTATION FOR POWER MEASUREMENTS

Instruments for field measurements of RF power density are generally either a broadband radiation hazard meter or an RF power meter with a calibrated antenna.

D-10.1 RADIATION HAZARD METERS. Radiation hazard meters are made specifically to detect and measure potentially hazardous electromagnetic energy radiating or leaking from RF or microwave sources. Meters of this type are made by several manufacturers, but all have similar characteristics of being small, portable, and indicating average power in mW/cm^2. Some have optional combinations of antennas and power ranges which permit measurements in the frequency range of 10 MHz to 18 GHz over the power range of 0.2 to 200 mW/cm^2.

D-10.1.1 Radiation hazard meters are designed for simplicity of operation. It is important, however, that the user become familiar with the manufacturer's instructions to be aware of any instrument limitations. The antennas, or probes, are characteristically easily damaged. They have both a maximum average power and a maximum peak power rating. Depending upon the duty cycle, it may be possible to damage the antenna by high peak power without exceeding the average power limit. In most cases, damage can occur even if the instrument is in the "off" position or the antenna is not connected.

D-10.1.2 Another precaution is to be aware of the response time of the instrument. The response time is the time required for the meter indication to reach 90 percent of its final steady-state value. If the radiating antenna is rotating rapidly or the instrument antenna is moved quickly, the reading may be significantly below the correct value.

D-10.1.3 Changes in the state-of-the-art and Navy requirements may result in changes of recommended instrumentation. Those activities having a need for instrumentation should consult their test equipment allowance list. For additional information relative to suitable instrumentation, contact Naval Sea Systems Command (SEA-04H), Washington, DC.

D-10.2 POWER METER AND ANTENNA METHOD. Power density can also be measured using an RF power meter, a calibrated antenna, and suitable attenuation. This measurement technique is somewhat cumbersome; however, since laboratory-type components can be used, it is possible to make accurate measurements over wide frequency and power ranges. The basic RF power meter measures power in mW. When an antenna is connected to the power meter and the capture area (effective area) of the antenna is known, then the power density in mW/cm^2 can be obtained.

D-10.2.1 <u>Power Meter</u>. RF power meters, such as the Hewlett Packard (HP) Model 432B, may be used for power density measurements. These instruments, or commercial equivalents, are

required for the maintenance of many radars and are readily available. They typically are capable of operating from internal batteries, have a 50-ohm input, and have multiple power ranges with full-scale readings from 10 μW to 10 mW.

D-10.2.2 Antennas. Power-density measurements can only be made if the effective area of the test antenna is known or can be determined. In most cases, the test antenna will be a standard gain waveguide horn, although any type can be used if its characteristics are known. When the effective area of an antenna is not known, it can be computed from:

$$A(eff) = \frac{G\lambda^2}{4\pi}$$

or, for a resonant dipole, the effective area may be determined by:

$$A(eff) = \frac{1.175 \times 10^8}{f^2}$$

where:

A (eff) = effective area in cm^2,
G = gain of antenna (power ratio),
λ = wavelength in cm, and
f = frequency in MHz.

D-10.2.3 Attenuators. For most instruments, it will be necessary to attenuate the signal picked up by the antenna so it will not exceed the limits of the power meter. The attenuation can be obtained using either a directional coupler with appropriate termination or an in-line attenuator. In either case, both the frequency and the power ratings must be correct. The typical 2-watt coaxial attenuators supplied with power meters, signal generators, etc., may not be suitable because of their lower power ratings. The required power rating for either a directional coupler termination or an in-line attenuator can be approximated by multiplying the expected power density by the effective area of the antenna. Coaxial cables used to interconnect the RF components will attenuate the signal, and this attenuation becomes a part of the total attenuation.

D-10.3 POWER DENSITY MEASUREMENTS. Power density measurements may be made using a power meter such as the HP Model 432B and the following general method of operation:

a. Determine the frequencies at which the measurements are to be made. Select the proper horn antenna or dipole antenna elements and directional coupler or attenuator according to frequency band designation. To avoid damage to the meter, use an attenuator or directional coupler having the maximum attenuation for initial measurement.

b. Interconnect the antenna and power meter using coaxial cables and attenuators as required.

c. Orient the pickup antenna for maximum reading on the meter.

d. Take reading as required.

NOTE

Make sure the pickup antenna is positioned such that it has the same polarization as the radiating antenna. In the event the radiating antenna is circularly polarized and the test antenna is not, the reading should be doubled.

Certain power meters are not designed to operate in high RF fields. In some cases, RF energy may penetrate the equipment case and prevent the meter from reading zero with no input. It may be necessary to either wrap the meter in aluminum foil for additional shielding or use a long coaxial cable to the antenna and place the meter in a reduced field.

D-10.4 EXAMPLE POWER MEASUREMENT. An example of power-density measurement is illustrated in figure D-14.

Assume the following data:

a. Radar Frequency - 3250 MHz

b. Pickup Antenna - Waveline Horn Model 299

c. Connecting Cables - 10 feet of RG-9A/U

d. Directional Coupler - Narda Model 3003-20

e. Power Meter - HP Model 432B

f. Meter Reading - 1.5 mW

From the proper charts and curves, the following data was obtained:

a. Effective area of pickup antenna at 3250 MHz - 213 cm^2
(obtained from graph of Waveline Horn Model 299)

b. Directional coupler attenuation at 3250 MHz - 20 dB
(obtained from table for Narda Directional Coupler 3003-20)

c. Cable attenuation at 3250 MHz - 1.8 dB
(obtained from graph for RG-9A/U cable)

Total attenuation = cable attenuation + directional coupler attenuation = 20 dB + 1.8 dB = 21.8 dB. From figure D-12, 21.8 dB = a power ratio of 151.4. Therefore,

$$\text{Power Density} = \frac{\text{Power Ratio x Meter Reading (mW)}}{\text{Effective Area of Pickup Antenna}}$$

$$= \frac{151.4 \times 1.5mW}{213cm^2}$$

$$= 1.06mW/cm^2$$

Figure D-14. Example of a Power Density Measurement

IF YOU WOULD LIKE TO FILL THIS FORM ONLINE PLEASE CLICK ANYWHERE ON THIS TITLE

IF YOU WOULD LIKE A COPY OF THIS TMDER IN MICROSOFT WORD FORMAT CLICK ANYWHERE ON THIS TITLE

Ref: NAVSEAINST 4160.3A

(Insert Classification of TMDER Here) CLASSIFICATION NAVSEA S0005-AA-GYD-030/TMMP

NAVSEA/SPAWAR TECHNICAL MANUAL DEFICIENCY/EVALUATION REPORT (TMDER)

INSTRUCTION: Continue on 8 1/2" x 11" paper if additional space is needed.

1. USE THIS REPORT TO INDICATE DEFICIENCIES, PROBLEMS, AND RECOMMENDATIONS RELATION TO PUBLICATIONS.
2. FOR CLASSIFIED TMDERS, SEE OPNAVINST 5510H FOR MAILING CLASSIFIED TMDERS.

1. PUB NO.	2. VOL/PART	3. REV. NO./DATE OR TM CH. NO./DATE	4. SYSTEM/EQUIPMENT IDENTIFICATION
NAVSEA OP 3565	**1**	**Sixth Rev/1 February 2003**	

5. TITLE	6. REPORT CONTROL NUMBER
ELECTROMAGNETIC RADIATION HAZARDS (U) (HAZARDS TO PERSONNEL, FUEL AND OTHER FLAMMABLE MATERIAL) (U)	

7. RECOMMENDED CHANGES TO PUBLICATION

PAGE NO. A	PARA-GRAPH B	C. RECOMMENDED CHANGES AND REASONS

8. ORIGINATOR'S NAME AND WORK CENTER (Please Print)	9. DATE	10. DSN/COMM NO.	11. TRANSMITTED TO

12. SHIP HULL NO. AND/OR STATION ADDRESS (Do Not Abbreviate)

NAVSEA 4160/1 (REV 8-95)(Destroy Old Stock)

PLEASE CLOSE WITH TAPE - DO NOT STAPLE - THANK YOU

FOLD HERE

DEPARTMENT OF THE NAVY

==========

Official Business

COMMANDER
NSDSA CODE 5B00
NAVSURFWARCENDIV
4363 MISSILE WAY
PORT HUENEME, CA 93043-4307

FOLD HERE